BER-VAC

SE 51 & SE 63

THREE POINT HITCH TWO STAGE

SNOWBLOWER

MODELS STARTING AT SERIAL NO. 0300101

11/93
OM 0168

WARRANTY

RAD TECHONOLOGIES INC. warrants to the original buyer that the equipment is free from defects in material and workmanship. RAD TECHNOLOGIES INC.'s obligation, under this warranty, will be limited to the repair or to the replacement (F.O.B. factory) of any part or component which RAD TECHNOLOGIES INC. shall disclose to be defective within one year from date of original purchase (unless other wise specified).

In no event shall RAD TECHNOLOGIES INC. be liable for consequential or special damages, direct or indirect, arisen by the buyer/user.

This warranty replaces all other written or implied warranties and RAD TECHNOLOGIES INC. COMPANY neither assumes nor authorizes any other obligation nor responsibility in connection with the sale of the said product or components.

This warranty will not apply to the product (or components) which will have been the object of an accident, alteration, abuse or misuse. Any claim for parts or replacement of equipment must be taken up with the authorized dealer or with the office of the Company.

All components not manufactured by RAD TECHNOLOGIES INC. (such as motors, tires, etc.) are covered by the original manufacturer's warranty.

All claims must be taken up within 30 days from date of mechanical breakage. The Company reserves the right to require the said parts and this F.O.B. our factory or distributor.

2835, Chemin de L'Aéroport, Thetford Mines (Québec) G6G 5R7
Tél.: (418) 338-4499 Télécopieur: (418) 338-6090

TABLE OF CONTENTS

PAGE

INTRODUCTION 2

SAFETY PRECAUTIONS 3

SAFETY DECALS 5

ASSEMBLY

STEP 1: ACCESSORY INSTALLATION

#9384 3 Point hitch 6
#9377 Chute and manual rotation 7
#9378 Electric chute rotation 9
#9379 Hydraulic chute rotation with 2" x 5" cylinder 10
#9380 Hydraulic chute rotation with orbit motor 12
#9369 Electric chute deflector 14
#9376 Hydraulic chute deflector 16
#9350-51 Heavy duty package 17
#9352-53 Extra heavy duty package 17

STEP 2: SNOWBLOWER INSTALLATION 18

OPERATION

Preparing for Snow Removal 19
Operating Controls 19
Adjustments 19
Snow Removal Methods 20

MAINTENANCE 21

PARTS

SE 51 & SE 63 Snowblower 22
Worm Gear Box 24
#9384 3 Point hitch 26
#9377 Chute and manual rotation 27
#9378 Electric chute rotation 28
#9379 Hydraulic chute rotation with 2" x 5" cylinder 29
#9380 Hydraulic chute rotation with orbit motor 32
#9369 Electric chute deflector 33
#9376 Hydraulic chute deflector 34
#9350-51 Heavy duty package 35
#9352-53 Extra heavy duty package 35
Driveline assembly 36
Decals 37

TORQUE SPECIFICATION TABLE . . . . . inside back cover

INTRODUCTION

TO THE PURCHASER

This new snowblower was carefully designed to give you years of dependable service.

This manual has been provided to assist in the safe operation and service of your new snowblower.

NOTE: All photographs and illustrations in the manual are intended for reference only and are based on the latest product information available at the time of publication.

Familiarize yourself fully with the safety recommendations and operating procedures before operating the machine. Carefully read, understand and follow these recommendations and make sure other operators of the machine understand safe operation.

This symbol, the industry's "Safety Alert Symbol" is used throughout this manual and on the snowblower's safety labels to warn of the possibility of personal injury. AQUILON requests that you take special care in reading and understanding the safety precautions before operating the snowblower or the tractor.

Record your snowblower serial number and model below. Your dealer requires this information to give you prompt efficient service when ordering parts or attachments. Service with genuine RAD parts when replacement parts are required.

Right hand and left hand are determined by sitting on the tractor seat facing forward.

MODEL _____ **SERIAL NUMBER** _____ **DATE PURCHASED** _____

SAFETY PRECAUTIONS

Careful operation is your best insurance against an accident. Read this section carefully before operating the tractor and snowblower. All operators, no matter how experienced they may be, should read this and other related manuals before operating the snowblower. It is the owner's legal obligation to instruct all operators in safe operation.

BEFORE OPERATION

This symbol, the industry's "Safety Alert Symbol", is used throughout this manual and on the snowblower's safety labels to warn of the possibility of personal injury. Kubota requests that you take special care in reading and understanding the safety precautions before operating the snowblower or the tractor.

1. Read and understand this Operator's Manual and the tractor Operator's Manual. Know how to operate all controls and how to stop the unit and disengage the controls quickly.

2. Never allow other persons to operate the equipment without proper instruction. Never allow children to operate the equipment.

3. Keep the area of operation clear of all bystanders, especially small children and pets.

4. Never wear loose, torn, or bulky clothing around the tractor and snowblower. It may catch on moving parts or controls leading to the risk of accident. Use additional safety items - hard hat, safety boots or shoes, eye and hearing protection, gloves, etc. - as appropriate or required.

5. Before the snow season, thoroughly inspect the area where the equipment is to be used and remove all door mats, sleds, boards, wires and other foreign objects.

6. Disengage clutch and PTO, and shift into neutral before starting the engine.

7. Do not operate equipment without wearing adequate winter outer garments.

8. Adjust collector housing height to clear gravel or crushed rock surface.

9. Never attempt to make any adjustments while engine is running.

10. Do not work under a raised snowblower.

11. Escaping hydraulic/diesel fluid under pressure can penetrate the skin. Use a piece of cardboard or paper rather than the hands to search for leaks.

OPERATION

1. Make sure the PTO (Power Take off) is attached properly before operation.

2. Before dismounting, take all possible precautions. Disengage PTO, lower the attachment, shift into neutral, set the parking brake, stop the engine, and remove the key.

3. Before starting, remove any ice that has accumulated in the auger and fan.

4. Watch carefully for foreign objects that could enter the blower while operating.

5. Make sure that the PTO is in the **NEUTRAL** position before starting engine.

6. Do not put hands or feet near rotating parts. Keep clear of discharge opening at all times.

7. Exercise extreme caution when operating on or crossing a gravel drive, walks, or roads. Stay alert for hidden hazards of traffic. Do not carry passengers.

   Use a piece of wood or stick to unplug spout. Do not use hands or feet.

9. Use adequate safety warning lights. Check local regulations.

10. Stop the engine, remove the key, set the parking brake, and allow the rotation parts to stop before unclogging the collector/impeller housing or discharge guide, and before making any repairs, adjustments or inspections.

11. If the snowblower starts to vibrate abnormally, stop the engine immediately, and check for the cause.Excessive vibration is generally a sign of trouble.

12. Do not run the engine indoors except when starting engine and transporting snowblower in or out of building. Do not operate or idle engine in a non-ventilated area. Carbon monoxide gas is colorless, odorless and deadly.

13. Do not clear slopes. Exercise extreme caution when changing direction on slopes. Do not attempt to clear steep slopes.

14. Never operate snowblower without guards, plates, and other safety protective devices in place.

15. Never operate snowblower near glass enclosures, automobiles, window wells, embankments, etc., without proper adjustment of snow discharge angle.

16. Never operate machine at high transport speeds on a slippery surface.

17. Use extra caution when backing up.

18. Do not direct discharge at bystanders or animals. Ejected objects may cause injury

19. Disengage power to auger/fan when transporting or when not in use.

20. Never operate the snowblower without good visibility and lighting.

21. Use only approved tire chains and wheel weights for better traction and stability.

22. Prolonged exposure to loud noise can cause impairment or loss of hearing. Wear a suitable hearing protective device such as earmuffs or earplugs to protect against objectionable or uncomfortable noises.

WHENEVER YOU SEE THIS SYMBOL:

IT MEANS:

ATTENTION!

BECOME ALERT!

YOUR SAFETY IS INVOLVED!

DECALS

REPLACE IMMEDIATELY IF DAMAGED

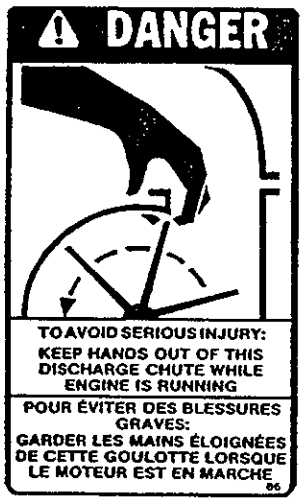

(1) #656779

(3) #656780

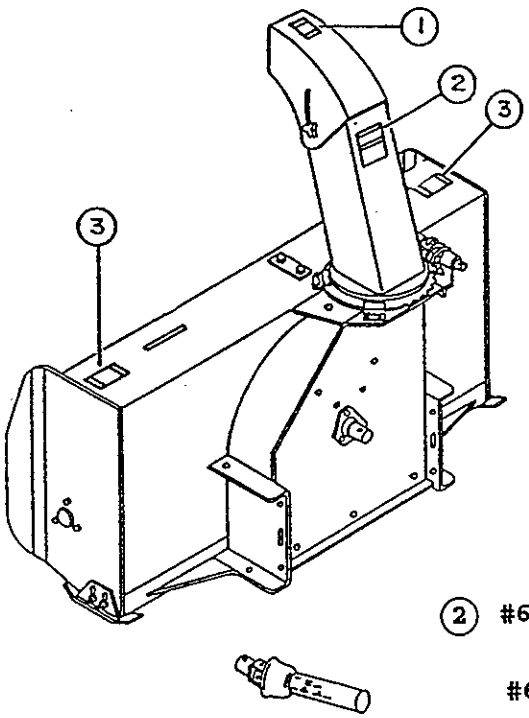

(2) #660988

#660989

WARNING

FAILURE TO FOLLOW SAFE OPERATING PROCEDURES MAY RESULT IN INJURY.

- FOR SAFE OPERATION FOLLOW ALL OPERATING INSTRUCTIONS ANS SAFETY PRECAUTIONS IN OPERATOR'S MANUAL.
- EYE PROTECTION MUST BE WORN AT ALL TIME
- KEEP HANDS, FEET AND CLOTHING AWAY FRO POWER DRIVEN PARTS.
- STOP ENGINE BEFORE LEAVING OPERATOR POSITION.
- WAIT FOR ALL MOVEMENTS TO STOP BEFORE STARTING TO ADJUST, LUBRICATE, CLEAN OR UNCLUG THE MACHINE.
- KEEP THE AREA OF OPERATION CLEAR OF ALL PERSONS AND ANIMALS.
- KEEP ALL GUARDS AND SHIELDS IN PLACE.
- NEVER DIRECT DISCHARGE TOWARD BYSTANDERS, BUILDINGS, CARS ETC.
- ALWAYS USE A DUST MASK WHEN WORKING IN DUSTY CONDITIONS.
- KEEP PLASTIC MATERIALS AWAY FROM INTENSE HEAT AND OPEN FLAME.
- NEVER ALLOW PASSENGERS ON THE ATTACHMENT.

MISE EN GARDE

NÉGLIGER DE SUIVRE LES PROCÉDURES SÉCURITAIRES D'UTILISATION PEUT ENTRAÎNER DES BLESSURES.

- POUR UNE UTILISATION SÉCURITAIRE SUIVRE TOUTES LES INSTRUCTIONS D'UTILISATION ET PRÉCAUTIONS SÉCURITAIRES DANS LE MANUEL DE L'OPÉRATEUR.
- PORTER DES LUNETTES DE SÉCURITÉ EN TOUT TEMPS.
- GARDER MAINS, PIEDS ET VÊTEMENTS ÉLOIGNÉS DES PIÈCES MOTRICES.
- ARRÊTER LE MOTEUR AVANT DE QUITTER LA POSITION DE L'OPÉRATEUR.
- ATTENDRE QUE TOUS LES MOUVEMENTS SOIENT ARRÊTÉS AVANT D'AJUSTER, LUBRIFIER, NETTOYER OU DÉBLOQUER LA MACHINE.
- GARDER L'ENDROIT D'UTILISATION DÉGAGÉ DE TOUTES PERSONNES ET ANIMAUX.
- GARDER TOUS LES ÉCRANS PROTECTEURS EN PLACE.
- JAMAIS DIRIGER L'ÉVACUATION VERS DES PIÉTONS, BÂTIMENTS, AUTOMOBILES, ETC.
- TOUJOURS UTILISER UN MASQUE À POUSSIÈRE DANS UN ENVIRONNEMENT POUSSIÉREUX.
- GARDER TOUTES LES MATIÈRES PLASTIQUES ÉLOIGNÉES DE LA CHALEUR INTENSE ET DE FLAMMES.
- NE JAMAIS PERMETTRE DE PASSAGERS SU CETTE MACHINE.

ASSEMBLY

MANY ACCESSORIES CAN BE ATTACHED TO YOUR NEW SNOWBLOWER. YOU WILL FIND THE INSTALLATION INSTRUCTIONS IN THE FOLLOWING ORDER.

- #9384 3 POINT HITCH
- #9377 CHUTE AND MANUAL ROTATION
- #9378 ELECTRIC CHUTE ROTATION
- #9379 HYDRAULIC CHUTE ROTATION WITH 2 X 5" CYLINDER
- #9380 HYDRAULIC CHUTE ROTATION WITH ORBIT MOTOR
- #9369 ELECTRIC CHUTE DEFLECTOR
- #9376 HYDRAULIC CHUTE DEFLECTOR
- #9350-51 HEAVY DUTY PACKAGE
- #9352-53 EXTRA HEAVY DUTY PACKAGE

After assembly, torque all bolts according to the Torque Specification Table.

STEP 1: ACCESSORY INSTALLATIONS

9384 3 POINT HITCH

a) Remove paint from blower drive shaft (fig.1, item 1).

b) Grease driveline sliding surfaces and yokes.

c) Install a 1/4" x 1/4" x 1 1/4" key (fig.1, item 13) in the blower drive shaft (fig.1, item 1) and slide driveline yoke (fig.1, item 14) (round yoke) over drive shaft. Do not use a hammer, use the sliding action of the driveline to set yoke on drive shaft.

d) Secure driveline yoke (fig.1, item 14) to blower drive shaft (fig.1, item 1) using a 5/16" x 2 3/4" bolt (fig.1, item 15) and nylon lock nut (fig.1, item 16). Securely tighten the bolt and a 3/8" x 3/8" set screw (fig.1, item 17) in the driveline.

e) Install driveline guard (fig.1, item 2) on blower using two 5/16" x 3/4" carriage bolts (fig.1, item 18), lockwashers and nuts (fig.1, item 19) securing gear box.

f) Install the lower hitch tubes (fig.1, item 3) on blower using a 5/8" x 3" bolt (fig.1, item 4), lockwasher & nuts (fig.1, item 20), and a 1/2" x 3" bolt (fig.1, item 5), lockwasher & nut (fig.1, item 21) for each hitch tube (welded flat bar must be toward the exterior).

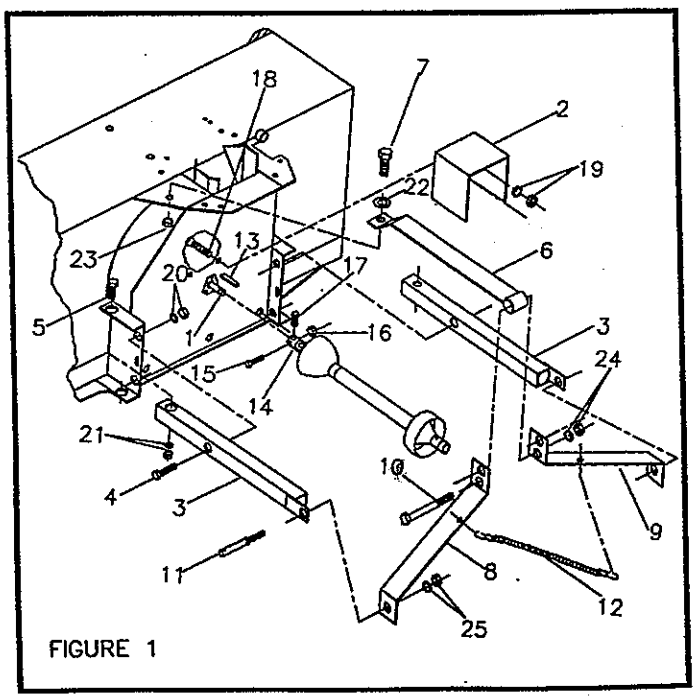

FIGURE 1

g) Attach upper hitch (fig.1, item 6) to blower using a 5/8" x 1 1/2" bolt (fig.1, item 7), lockwasher(fig.1, item 22) & nut (fig.1, item 23) (lockwasher on top side).

h) Install the two hitch arms (fig.1, items 8 & 9) to the upper hitch (fig.1, item 6) through middle hole using a 5/8" x 3 3/4" bolt (fig 1, item 10), lockwasher and nut (fig.1, item 24).

i) Attach each hitch arm (fig.1, items 8 & 9) inside the hitch tubes (fig.1, item 3) using the hitch pins (fig.1, item 11), 7/8" lockwashers and nuts (fig.1, item 25).

j) Install the driveline storage chain (fig.1, item 12) in the small hole in each hitch arm (fig.1, items 8 & 9) using two "S" hooks. Using pliers, close "S" hooks, leave one side of one "S" hook open (to attach and detach).

k) Attach driveline shield safety chain in same hole position as the "S" hook of section j.

l) Torque all bolts according to the torque specification table.

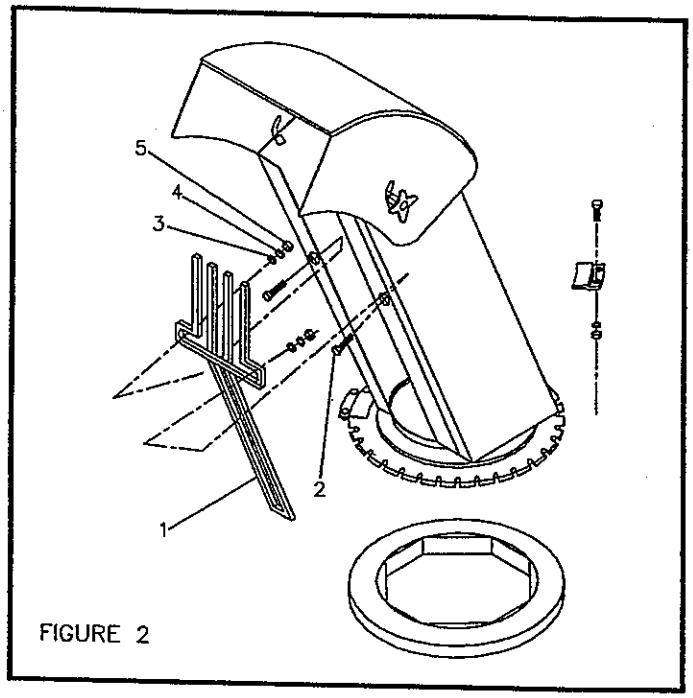

FIGURE 2

#9377 MANUAL CHUTE ROTATION

a) Install the hand guard (fig.2, item 1) on the chute with the top portion inside the chute and the bottom section outside the chute base ring. Place two 1/4" x 3/4" bolts (fig.2 item 2) with the head on the outside, through the chute then through the hand guard and secure bolts with flatwashers, lockwashers and nuts (fig.2 items 3-4-5). Torque to 9-11 lbs.ft.

b) Place the plastic anti-friction insert (fig.3, item 1) over the chute base. Apply grease on top of this insert where it will contact the chute base.

c) Insert the 1 5/16" long plastic bushing (fig.3, item 2) in the tube weldment (fig.3, item 6).

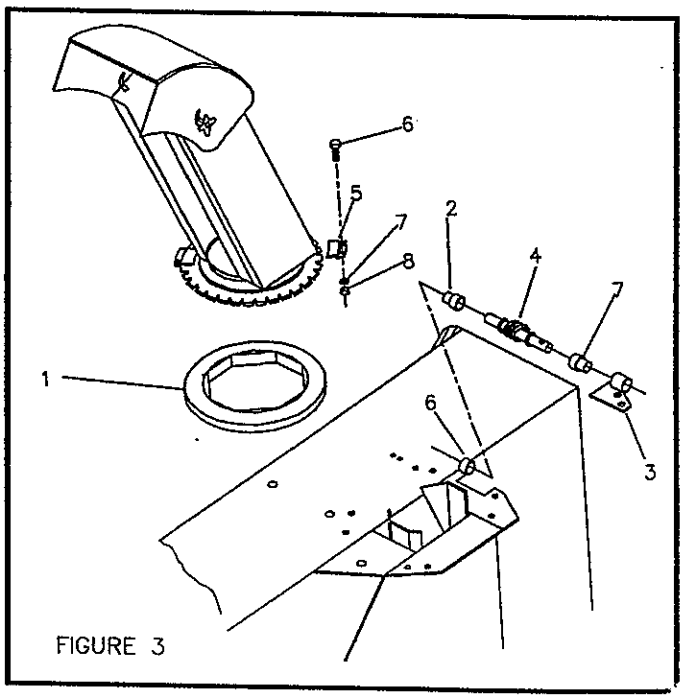

FIGURE 3

d) Insert the 1 11/16" long bushing (fig.3, item 7) in the rotation bracket (fig.3, item 3).

e) Install shortest tube end of rotation worm (fig.3, item 4) in the bushing (fig.3, item 2) in the tube weldment (fig.3, item 6).

f) Install the chute over the plastic insert and place the four retaining plates (fig.3, item 5). Secure using eight 1/4" x 3/4" bolts, lockwashers and nuts (fig.2, items 6-7-8), attaching rotation bracket (fig.3, item 3) on the underside of chute base lip. Torque to 9-11 lbs.ft.

g) Install the anchor angle (fig.4,item 1) on the right hand hitch arm (fig.4, item 9) using two 3/8" x 1 1/4" bolts lockwashers and nuts (fig.4, items 10-11-12). Tighten securely.

h) Install anchor tube (fig.4, item 2) on angle (fig.4, item 1) so that tube leans toward snowblower using a 3/4" x 1 1/2" bolt , lockwasher and nut (fig.4, items 13-14-15).

i) Insert handle support (fig.4, item 8) inside anchor tube (fig.4, item 2) and secure loosely with a 3/8" x 5/16" set screw (fig.4, item 16).

j) Assemble tube with U-joint (fig.4, item 3) inside rotation worm, align holes and insert a 10-24 x 1" capscrew (fig.4, item 4) from larger hole side of worm (so that head of capscrew sinks in worm). Secure with a nylon lock nut (fig.4, item 17).

k) Install the plastic grommet (fig.4, item 5) in the handle support.

l) Pass the handle (fig.4, item 6) through the grommet (fig.4, item 5) and inside the rotation tube (fig.4, item 3). Select length, align nearest holes and secure with a 5mm x 100mm hair pin (fig.4, item 18).

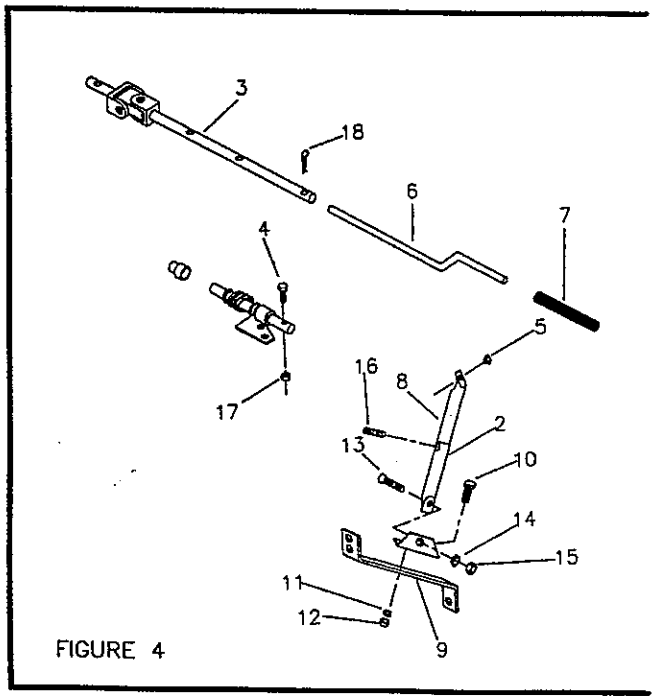

FIGURE 4

m) Adjust handle position and height to a comfortable and safe operating position after the snowblower has been mounted to the tractor. Tighten set screw (fig.4, item 16) on anchor tube and the 3/4" x 1 1/2" bolt (fig.4, item 13).

CAUTION: TO AVOID PERSONAL INJURY: Check the full lifting range of the snowblower, to ensure that the chute rotation handle is clear of the operator's area when the snowblower is in raised position.

n) Install plastic handle (fig.4, item 7) over rotation handle.

o) Tighten all bolts according to the torque specification table.

#9378 ELECTRIC CHUTE ROTATION

a) Insert the 1 11/16" plastic bushing (fig.5, item 1) in the rotation bracket (fig.5, item 2).

b) Pass longest tube end of rotation worm (fig.5, item 5) through plastic bushing (fig.5, item 1) and over motor adaptor (fig.5, item 3). Align holes and secure with a 10-24 x 1" capscrew and nylon lock nut (fig.5, items 7-8). Tighten securely.

c) Install the chute over the plastic insert and place the four retaining plates (fig.5, item 6). Secure using eight 1/4" x 3/4" bolts, lockwashers and nuts, attaching rotation bracket assembly (fig.5,item 2) on the underside of chute base lip. Torque to 9-11 lbs.ft.

d) Drill one 1/2" hole in tractor for control switch. Drill one .593" hole at least 2 1/2" from control switch hole for fuse holder. The two holes must be drilled in an appropriate location and must not interfere with existing controls or electrical systems.

e) Solder one 18" wire to the side terminal of fuse holder and the other 18" wire with eyelet to the bottom terminal (see figure 6).

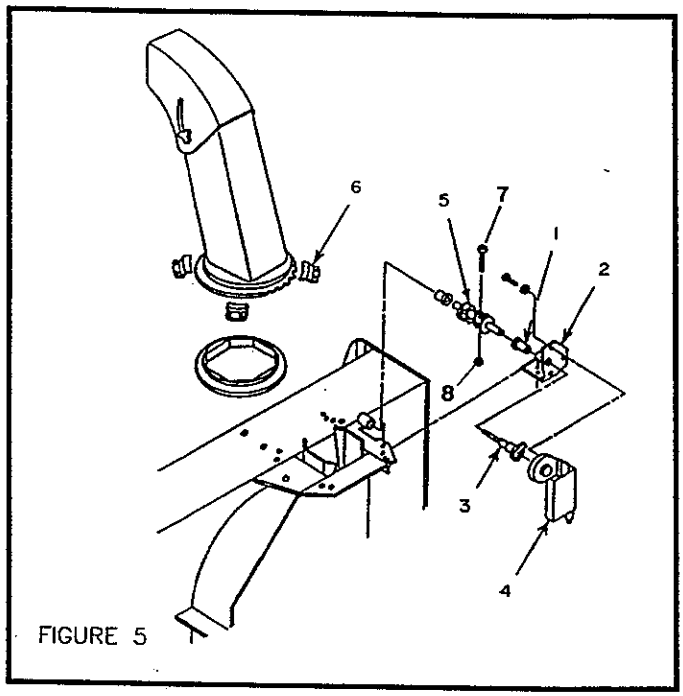

FIGURE 5

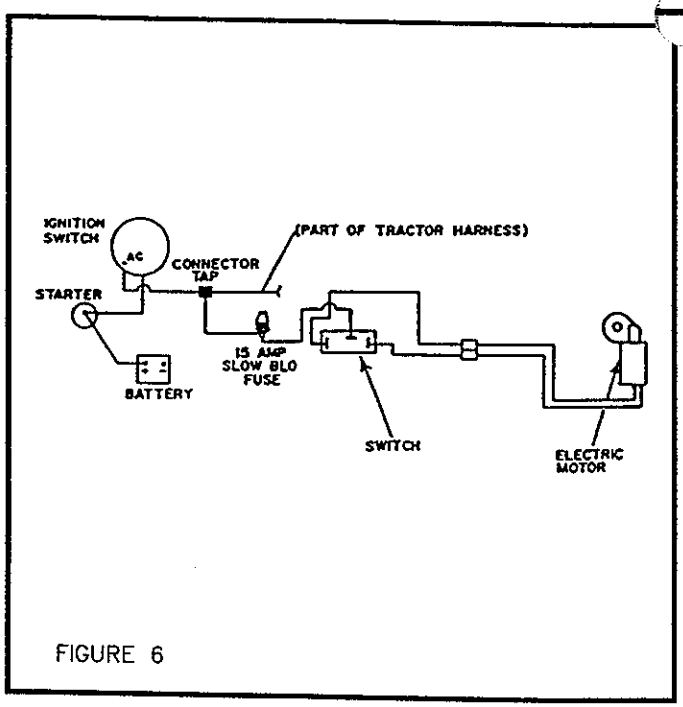

FIGURE 6

f) Install control switch and fuse holder in holes drilled in (d) above, and thread rubber toggle protector over switch.

g) Connect one wire from fuse holder to middle terminal of control switch, the other 18" wire to the tractor ignition switch (see figure 6).

h) Connect one end of the long lead wire to the electric motor and the other end to the control switch. Cut this wire at a convenient location for snowblower removal.Install the wire connectors with one male and one female connector to the motor half of the wire.This will allow the snowblower to be easily dismounted.

i) Secure wires away from moving parts using the provided tie wraps and adhesive clips.

NOTE: If chute rotates opposite to direction of control switch, simply reverse motor lead wires.

#9379 HYDRAULIC CHUTE ROTATION WITH CYLINDER

a) Attach longest flatbar end of rotation arm support (fig.7,item 1) on the underside of the chute base using a 5/8" x 1" bolt (fig.7,item 2) and lockwasher. Secure other end to collector housing using two 3/8" x 1" bolts (fig.7,item 3), lockwasher and nuts with bolt heads on the top side. Torque the 5/8" bolt to 150-180 lbs/ft., and the two 3/8" bolts to 35-42 lbs/ft.

b) Assemble pulleys (fig.7,item 4) in rotation arm (fig.7,item 5) using two 5/8" x 1 1/8" pins (fig.7,item 6) with the pin heads on the underside. Secure with two 1/8" x 1 1/4" cotter pins (fig.7, item 13).

c) Place rotation arm (fig.7,item 5) on arm support with the welded sleeve toward the front of blower and away from chute base. Insert a 5/8" x 2 1/4" bolt (fig.7,item 7) through rotation arm and thread through arm support. Tighten securely and loosen 1/8 of a turn. Lock bolt on underside of arm support using a 5/8" nut (fig.7, item 14).

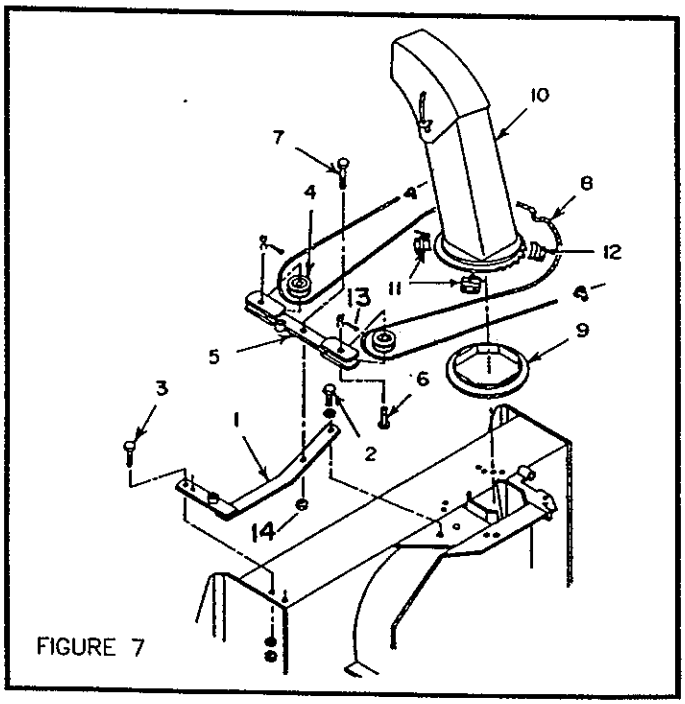

FIGURE 7

d) Insert steel cable (fig.7,item 8) through the two small holes in chute base from the inside with equal length on both side.

e) Install plastic anti-friction insert (fig.7,item 9) on blower chute base. Only one position provides a perfect fit.

f) Place chute (fig.7,item 10) over plastic insert. Adjust so that chute opening is straight forward and the two small holes in chute base are on the right hand side.

g) Install the two retaining plates with cable guide (fig.7,item 11) on left hand side of chute base using four 1/4" x 3/4" bolts, lockwashers and nuts (fig.8, items 6-7-8-). Retaining plate guides must be pointing away from each other. Install the two standard retaining plates (fig.7,item 12) on other side of chute using four 1/4" x 3/4" bolts, lockwashers and nuts. Torque the eight 1/4" bolts to 9-11 lbs/ft.

h) Install hand guard (fig.8,item 1) on chute with the top portion inside the chute and the bottom section outside the chute base ring. Place two 1/4" x 3/4" bolts (fig.8,item 2) with the head on the outside of the chute, through the chute, then through the hand guard, and secure with flatwasher, lockwasher and nut (fig.8, items 3-4-5) on each bolt. Torque to 9-11 lbs/ft.

i) With the chute opening facing forward and rotation arm parallel to blower sides , route the cable ends around the chute base (fig.9,item 1) away from each other , around the rotation pulleys (fig.9,item 2) from the inside to the outside. Secure cable ends to the front and rear side of the chute using the two cable clamps (fig.9,item 3). There should be at least 1" of cable protruding each clamp. Torque to 9-11 lbs/ft.

NOTE: If chute does not rotate equal distance on both sides, readjust cable.

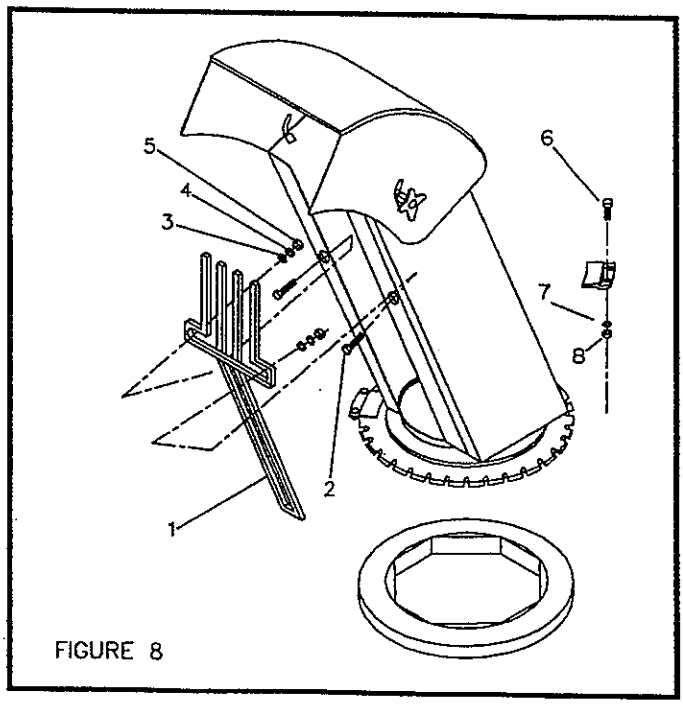

FIGURE 8

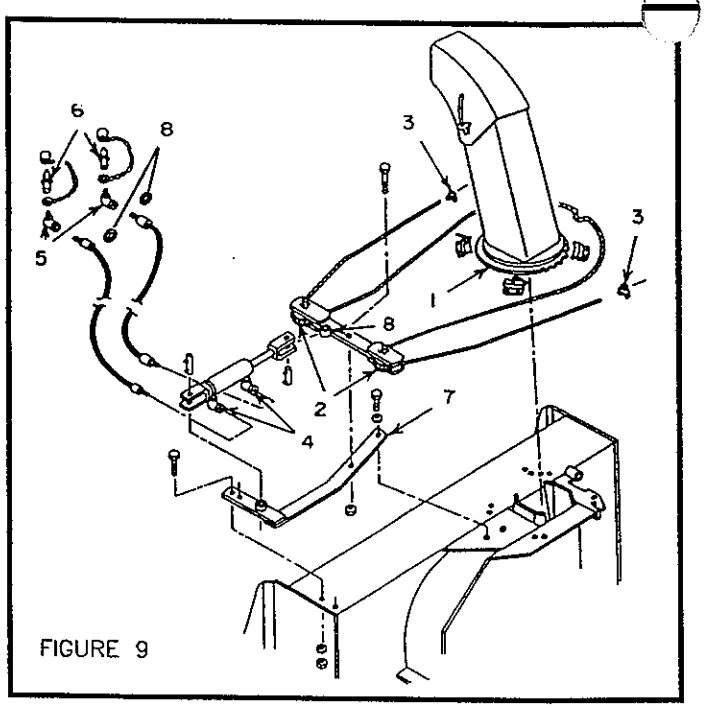

FIGURE 9

j) Install a 90 degree elbow 3/8" male x 1/4" pivoting female (fig.9,item 4) in each cylinder port using thread sealant. With cylinder ports facing you and base end to your left, set both elbows at approximately 2 o'clock.

k) Using thread sealant, install a 90 degrees elbow 3/8" male x 3/8" pivoting female (fig.9, item 5) at one end of each hose. Install a male quick coupler (fig.9, item 6, not included) with dust cap over each elbow (dust cap ring must be on threaded portion before installation).

l) Attach the 51" hose to cylinder base end elbow and the 46" hose to rod end elbow.

m) Install cylinder base end on rotation support (fig.9,item 7)(cylinder ports on underside), and rod end on rotation arm (fig.9, item 8) using provided pins and cotter pins.

#9380 CHUTE AND HYDRAULIC ROTATION

a) Install the hand guard (fig.10, item 1) on the chute with the top portion inside the chute and the bottom section outside chute base ring. Place two 1/4" x 3/4" bolts (fig.10 item 2) with the head on the outside of the chute, through the chute then through hand guard and secure each bolt with a flatwasher, lockwasher and nut (fig.10, items 3-4-5). Torque to 9-11 lbs. ft.

b) Place the plastic anti-friction insert (fig.11, item 1) over the chute base. Apply grease on top of this insert where it will contact the chute base.

c) Place the chute on the plastic insert and secure with four retaining plates (fig.11, item 2) using eight 1/4" x 3/4" bolts, lockwashers and nuts (fig.10, items 6-7-8). Do not tighten.

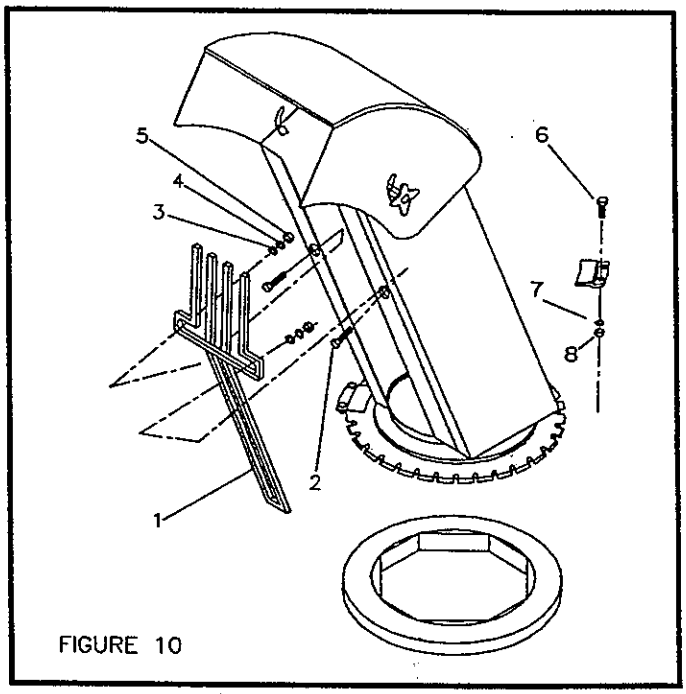

FIGURE 10

d) Insert the 1 5/16" long plastic bushing (fig.11, item 3) in the tube weldment (fig.11, item 9).

e) Insert the 1 11/16" long bushing (fig.11, item 4) in the rotation bracket (fig.11, item 5).

f) Install longest tube end of rotation worm (fig.11, item 6) in the bushing installed in the rotation bracket.

g) Insert locking collar (fig.11, item 7) over rotation worm.

h) Install a 1/8" x 3/16" x 1" key in the hydraulic motor shaft keyway.

i) Install hydraulic motor (fig.11, item 8) on rotation bracket and inside rotation worm. Secure the motor on the rotation bracket using two 3/8" x 1 1/4" bolts, flatwashers (on motor side), lockwashers and nuts (fig.11, items 10-11-12-13). Torque to 35-42 lbs/ft.

j) Install rotation bracket assembly on under side of chute base lip and bushing (fig.11, item 3) in tube weldment (fig.11, item 9). Secure assembly with the retaining plate bolts.

k) Securely tighten the two set screws in the locking collar (one over the key) (fig.11, item 15).

l) Install a connector 7/8" O.R.B. male x 9/16"-18 J.I.C. male (fig.12, item 1) in each port of hydraulic motor.

m) Install 90 degree elbow 1/4" male x 1/4" pivoting female (fig.12, item 2) at male end of hoses.

n) Using thread sealant, attach a male quick coupler with rubber dust cap (fig.12, item 3) on each elbow (dust cap ring must be on hose before installation).

o) Connect the two hydraulic hoses to the motor, placing a flow restrictor (fig.12, item 4) in connector (fig.12, item 1).

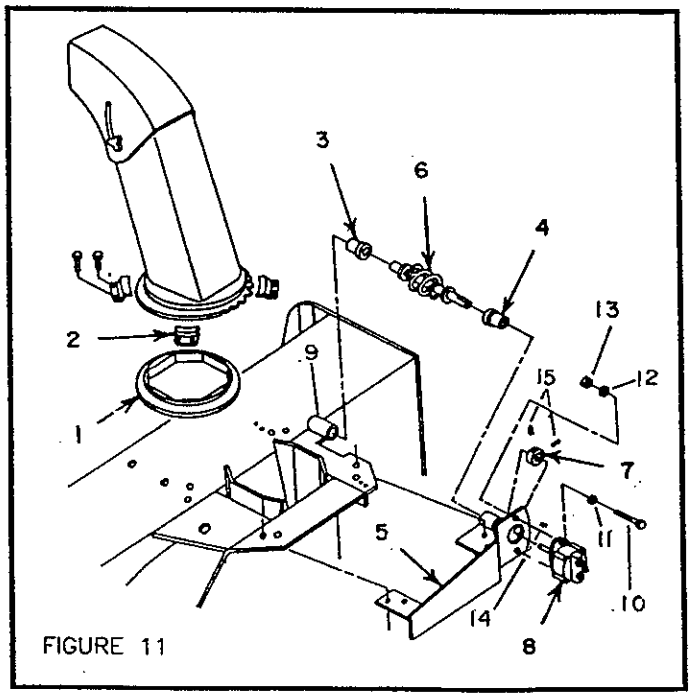

FIGURE 11

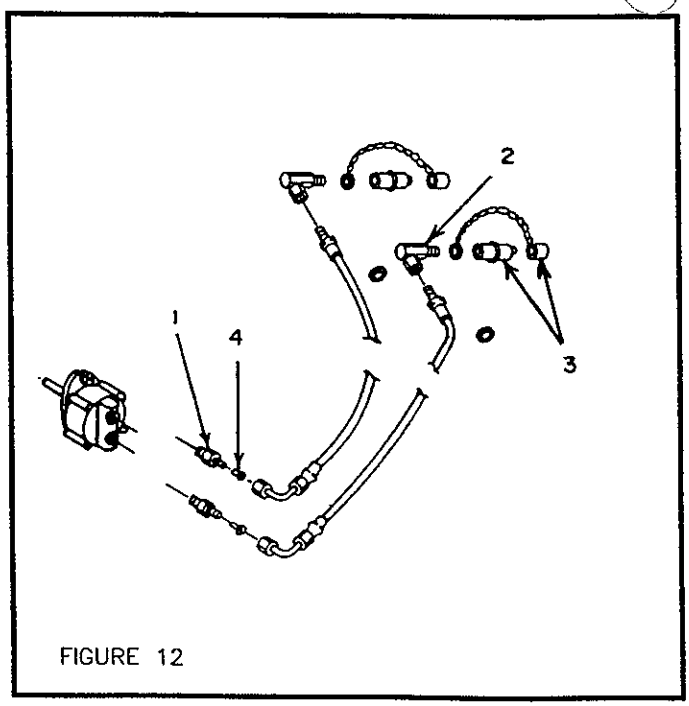

FIGURE 12

#9369 ELECTRIC DEFLECTOR

a) Remove the two manual adjustment knobs (fig.13, item 1) and bolts from each side of deflector and replace with two 5/16" x 3/4" carriage bolts, using original nylon washers and two nylon lock nuts, leaving 1/16" play.

b) Place actuator support bracket (fig.13, item 2) on center of chute deflector, flush with bottom edge of deflector. Using this bracket as a template, drill four 11/32" holes in deflector, and bolt in place with four 5/16" x 3/4" allen flat socket capscrew, lockwashers and nuts (fig.13, items 3-6-7), with the capscrew heads inside the chute. Tighten so that capscrew heads sink flush to inside surface of deflector.

c) Retract actuator rod (fig.13, item 9) completely and secure to deflector bracket (fig.13, item 2) and chute bracket (fig.13, item 4) which will be installed in section "d" (next), using two 1/4" x 1 1/4" bolts (fig.13, item 5) and nylon lock nuts (fig.13, item 8). Secure loosely to permit movement.

d) Open deflector to maximum so that actuator rod retracts completely. Place chute bracket (fig.13, item 4) on the center (left to right) rear of chute and using bracket as a template, drill four 11/32" holes in chute. Bolt bracket to chute using four 5/16" x 3/4" allen flat socket cap screw, lockwashers and nuts (fig.13, items 3-6-7), with the capscrew heads inside the chute. Tighten so that capscrew heads sink flush with inside surface of the chute.

e) Drill one 1/2" hole in tractor for control switch. Drill one .593" hole at least 2 1/2" from control switch hole for fuse holder. The two holes must be drilled in an appropriate location and must not interfere with existing controls or electrical systems.

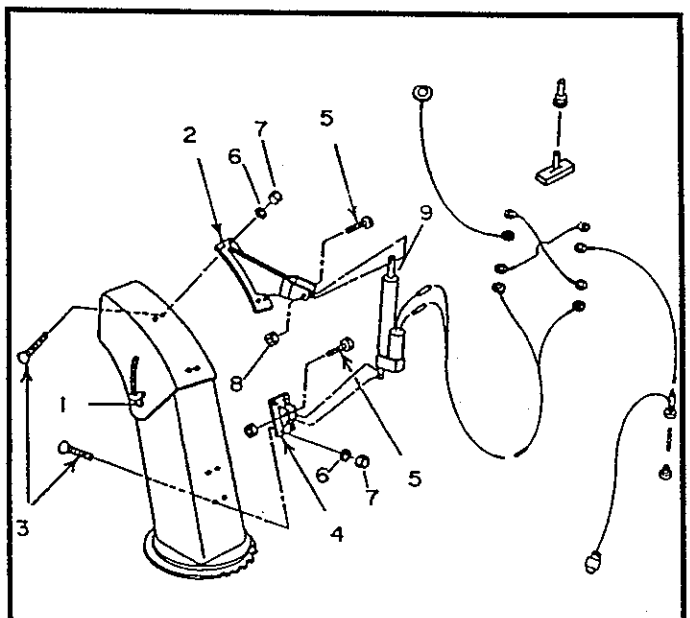

FIGURE 13

f) Solder one 18" wire to the side terminal of fuse holder and the other 18" wire with eyelet to the bottom terminal (see figure 14).

g) Install control switch and fuse holder. Thread rubber toggle protector over switch.

h) Connect eyelet end of 18" wire to **"b"** terminal on control switch (see fig.14).

i) Connect one end of the 17" wire to the **"e"** terminal on the control switch (see fig. 14). Connect other end to a suitable ground on the tractor frame.

j) Connect one end of one 5" wire to the **"a"** terminal on control switch (see fig. 14). Connect other end to the **"d"** terminal on control switch (see fig.14).

k) Connect one end of the other 5" wire to the **"c"** terminal on control switch (see fig. 14). Connect other end to the **"f"** terminal on control switch (see fig.14).

l) Connect eyelet end of the 102" double wire to the **"a"** & **"f"** terminals on control switch (see fig.14).

m) Connect fused wire to wire from terminal "A" of tractor ignition switch using connector tap.

n) Connect other ends of the 102" double wire to the electric motor. Cut this wire at a convenient location for snowblower removal. Install the wire connectors with one male and one female connector to the motor half of the wire. This will allow the snowblower to be easily dismounted.

o) Secure wires away from moving parts using the provided tie wraps and adhesive clips.

NOTE: If deflector functions opposite to direction of control switch, simply reverse actuator lead wires.

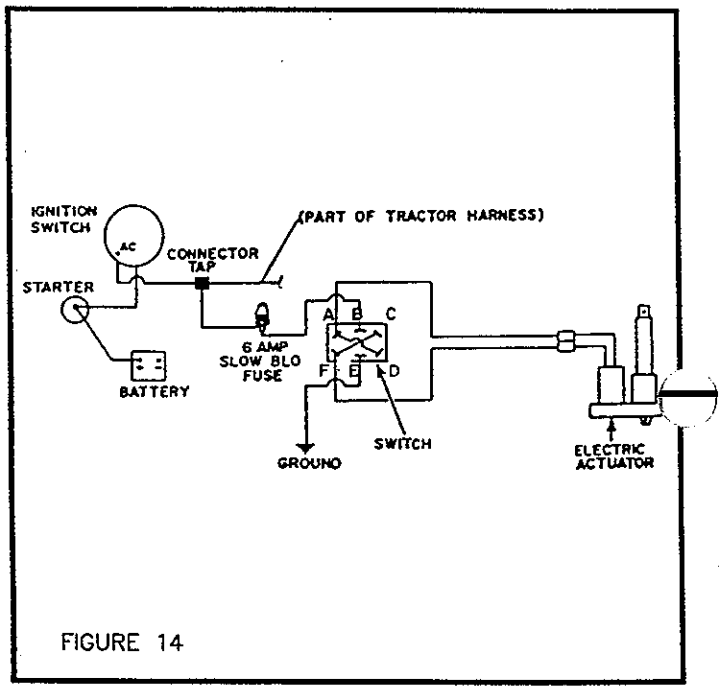

FIGURE 14

#9376 HYDRAULIC DEFLECTOR

a) Remove the two manual adjustment knobs (fig.15, item 1) and bolts from each side of deflector and replace with two 5/16" x 3/4" carriage bolts, using original nylon washers and two nylon lock nuts, leaving 1/16" play.

b) Place hydraulic cylinder support bracket (fig.15, item 2) on center of chute deflector, flush with bottom edge of deflector. Using this bracket as a template, drill four 11/32" holes in deflector, and bolt in place with four 5/16" x 3/4" allen flat socket capscrew, lockwashers and nuts (fig.15, items 3-6-7), with the capscrew heads inside the chute. Tighten so that capscrew heads sink flush to inside surface of deflector.

c) Retract hydraulic cylinder rod (fig.15, item 9) completely and secure to deflector bracket (fig.15, item 2) and chute bracket (fig.15, item 4) which will be installed in section "d" (next), using the two cylinder pins (fig.15, item 5). Block with the two cotter pins (fig.15, item 8). Secure loosely to permit movement.

d) Open deflector to maximum so that the hydraulic cylinder rod retracts completely. Place chute bracket (fig.15, item 4) on the center (left to right) rear of chute and using bracket as a template, drill four 11/32" holes in chute. Bolt bracket to chute using four 5/16" x 3/4" allen flat socket cap screw, lockwashers and nuts (fig.15, items 3-6-7), with the capscrew heads inside the chute. Tighten so that capscrew heads sink flush with inside surface of the chute.

e) Install a 90 degree elbow 3/8" male x 1/4" pivoting female (fig.15,item 4) in each cylinder port using thread sealant. With cylinder ports facing you and base end to your left, set both elbows at approximately 2 o'clock. Attach the 48" hose to cylinder base end elbow and the 54" hose to rod end elbow.

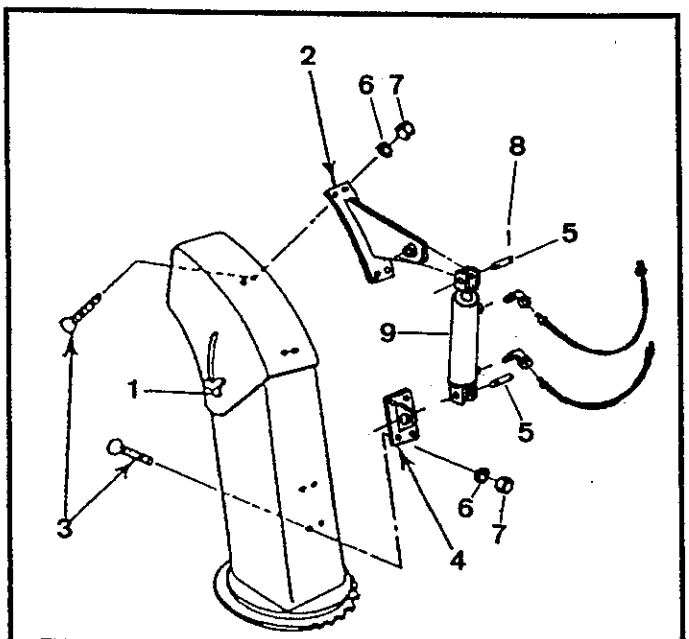

FIGURE 15

ASSEMBLY

 # 9350-51 HEAVY DUTY PACKAGE
 # 9352-53 EXTRA HEAVY DUTY PACKAGE

a) Replace snowblower cutting edge with the heavy duty cutting edge (fig.16, item 1) using eight (for 51" model) or ten (for 63" model) 3/8" x 1 1/4" plow bolts (fig.16, item 2) and nylon lock nuts. Tighten securely.

b) Remove snowblower skid shoes and install the heavy duty skid shoes (fig.16, item 3) using two 3/8" x 1" carriage bolts (fig.16, item 4) and nylon lock nuts.

c) Drill one 13/32" dia. hole in each side plate using the skid shoes as templates. Secure each skid shoe using another 3/8" x 1" carriage bolt (fig.16, item 5) and nylon lock nut.

d) Securely tighten nuts on skid shoes.

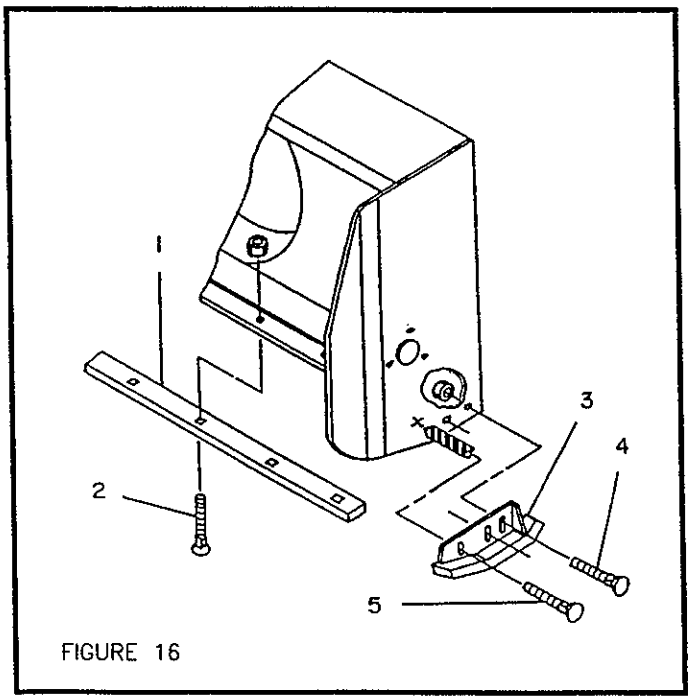

FIGURE 16

STEP 2: SNOWBLOWER INSTALLATION

a) Attach tractor lower hitch arms (fig.17, item 1) to the hitch pins (fig.17, item 5) and secure with tractor linchpins (fig.17, item 2).

b) Install the tractor upper hitch (fig.17, item 3) in upper hole position of snowblower hitch arms (fig.17, item 6) using tractors pin (fig.17, item 4) and linchpin (fig.17, item 7).

c) Adjust snowblower so that it runs level using the tractor upper hitch.

d) Set tractor anti-sway turnbuckles so that snowblower does not sway. Be sure the turnbuckles clear the tractor tires.

CAUTION: Before connecting snowblower driveline to tractor PTO shaft, make sure driveline is not too long in raised, lowered and middle position. If the driveline is too long it must be shortened (cut), to avoid damaged to tractor.

e) Connect driveline to tractor PTO shaft, making sure that the driveline locking collar is well secured to the tractor.

f) Secure driveline safety chain to tractor master shield to prevent driveline shield from rotating.

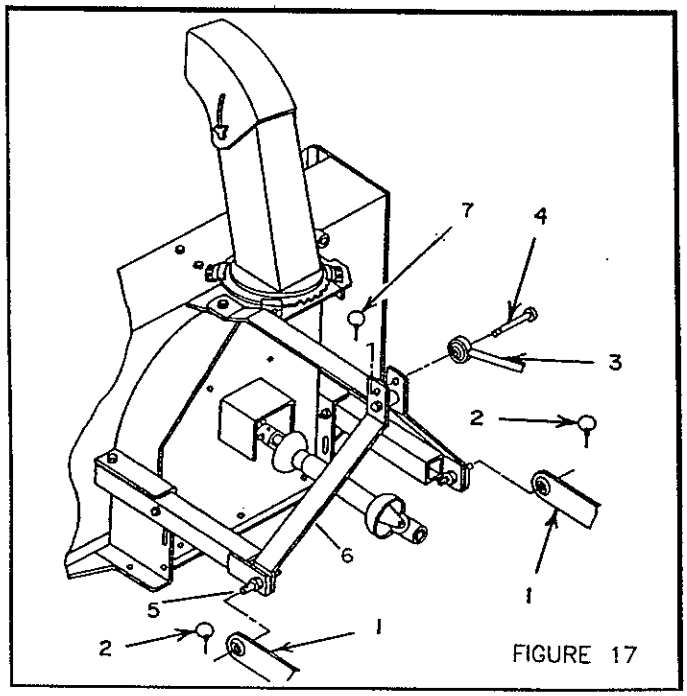

FIGURE 17

If using manual chute rotation:

CAUTION: To avoid personal injury, check the full lifting range of the snowblower, to ensure that the chute rotation handle is clear of the operator's area when the snowblower is in raised position.

The safe operation of this machine is the responsibility of the operator. The operator should be familiar with the tractor and snowblower and all safety practices before starting operation.

IMPORTANT: To avoid damage to the snowblower, retorque all bolts after the first 10 hours of operation.

OPERATIONS

PREPARING FOR SNOW REMOVAL

1. Read the Operator's Manual carefully before using the tractor and snowblower. Be thoroughly familiar with the controls and proper use of the equipment. Know how to stop the unit and disengage the controls quickly.
2. Make sure the blower is clear of snow before engaging the PTO.
3. Make sure the auger and fan operate freely.
4. Check the oil level in the worm gear box and if necessary, add AGMA 5EP or API GL-5 SAE 90 gear oil.
5. Check the three shearbolts, one on each auger section and one between the fan and gearbox for proper tightness.
6. Adjust so that the snowblower skid shoes run level.
7. Wear adequate winter outer garments while operating equipment.

OPERATING CONTROLS

- **MANUAL CHUTE ROTATION**
  Turning the handle in a clockwise direction, turns the chute in the clockwise direction.

- **RAISING AND LOWERING THE SNOWBLOWER**
  Move the 3 point control lever on right hand side of seat down or forward to lower, and up or rearward to raise

- **PTO OPERATION**
  The mid PTO is activated by pulling up the PTO lever on left side of seat. Push down to disengage.

- **ELECTRIC DEFLECTOR**
  Moving the toggle up or backward raises the deflector. Moving the toggle down or forward lowers the deflector

- **ELECTRIC CHUTE ROTATION**
  Moving the toggle to the right rotates the chute in a clockwise direction to the right. Moving the toggle to the left rotates the chute in a counterclockwise direction to the left.

ADJUSTMENTS

WARNING: To avoid personal injury, be sure the tractor engine is off, the PTO disengaged, and all movement has stopped before making any adjustments.

- **DEFLECTOR ADJUSTMENT**
  Set the angle of deflection according to the distance the snow must be thrown. To set the deflector angle, loosen the two deflector knobs, adjust the deflector to the appropriate angle, and retighten the two knobs securely.

- **SKID SHOE ADJUSTMENT**
  Adjust the snowblower so that the skid shoes run level. Adjust the skid shoes according to the surface being cleared. Adjust downwards for rough or uneven surface conditions so that stones are not thrown with the snow, and adjust upwards for smooth surfaces. Adjust both skid shoes to the same height to keep the cutting edge level.

- **REDUCTION CHAIN TENSION ADJUSTMENT**
  Remove chain cover (fig.3, item 2). Loosen the four bolts securing the reduction box (fig.2, item 6) to the snowblower. Tighten the chain using the tightener bolt (fig.3, item 1) on left hand side of fan housing. Leave approximately 1/4" deflection in the bottom span of chain. Tighten the four bolts securing reduction box to the snowblower.Install the chain cover.

- **WORK AND TRAVEL SPEED**
  Working ground speed will depend on the depth and density of the snow to be cleared. Normally, ground speed will range from 4 to 7 mph for light, dry snowfalls (3-6"), and 1-3 mph for heavy, wet or drifted snow.
  To transport, disengage the PTO, and raise the snowblower to full transport height.

OPERATIONS

SNOW REMOVAL METHODS

WARNING: DO NOT USE HANDS OR FEET TO UNPLUG CHUTE. DO NOT ATTEMPT TO CLEAR PLUGGED CHUTE OF SNOW WHILE TRACTOR ENGINE IS RUNNING. IF THE CHUTE PLUGS, DISENGAGE THE P.T.O., SHUT OFF THE TRACTOR ENGINE, REMOVE THE IGNITION KEY, WAIT FOR ALL MOVEMENT TO STOP, AND THEN CLEAR THE SNOW FROM THE CHUTE.

A definite pattern of operation is required to thoroughly clean the snow area. These patterns will avoid throwing snow in unwanted places as well as eliminating a second removal of snow.

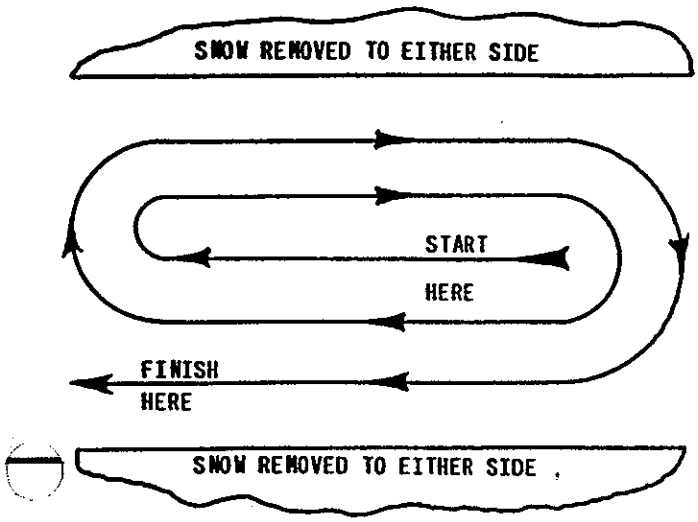

Where it is possible to throw the snow to the left and right (above), as on a long driveway, it is advantageous to start in the middle. Plow from one end to the other, throwing snow to both sides without changing the direction of the discharge guide.

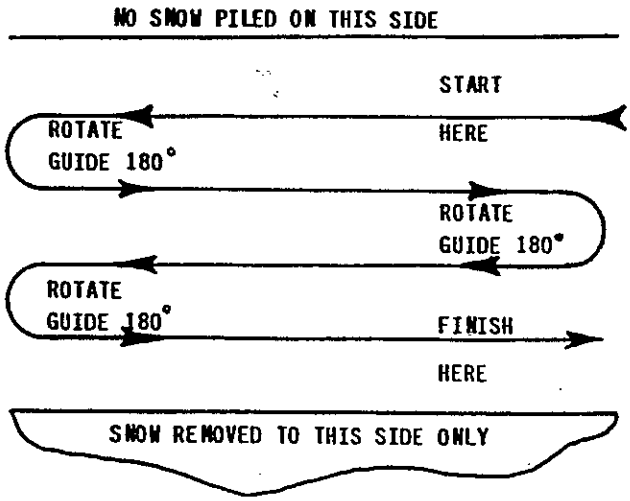

If the snow can only be thrown to one side of the driveway or sidewalk (above), start on the opposite side. At the end of the first pass, rotate the discharge guide 180 degrees for the return pass. At the end of each succeeding pass, rotate the discharge guide 180 degrees to maintain direction of throw in the same area.

MAINTENANCE

TIRE PRESSURE

Inflate front wheel tires to 26-27 psi.
Inflate rear wheel tires to 6-7 psi.

MAINTENANCE SERVICE AND STORAGE

1. Always use the special shear bolts on the fan, and the special grooved shear bolts on the auger sections, as shown on the shearbolt decal inside the collector housing.

2. Check the shear bolts at frequent intervals for proper tightness to be sure the blower is in safe working condition.

3. Never store the tractor with fuel in the fuel tank inside a building where open flame or sparks are present. Allow the engine to cool before storing in any enclosure.

4. Run the snowblower a few minutes after blowing snow to prevent freeze up of the auger and the impeller.

5. Provide adequate blocking before working under the snowblower when in the raised position.

LUBRICATION

1. **GEARBOX:** Check the oil level in the worm gear drive every month. If necessary add AGMA 5EP, or API GL-5 SAE90 gear oil

2. **AUGER SECTIONS:** Grease the fitting on each auger section every 24 hours of operation or once a year.

3. **REDUCTION CHAIN (front mount only):** Lubricate with chain saw chain lubricant every 4 hours of operation and after each use.

4. **PTO DRIVELINE(S):** Grease each u-joint fitting every 8 hours of operation. Slide drive shaft apart and coat sliding surfaces with grease every 8 hours of operation.

END OF SEASON STORAGE

1. Clean the snowblower thoroughly.

2. Repaint all parts from which paint has worn.

3. When the snowblower is dry, oil all moving parts. Apply oil liberally to all surfaces to protect against rust.

4. Lubricate the snowblower as instructed above.

5. List the replacement parts that will be needed before the next season.

6. Store the snowblower in a dry place.

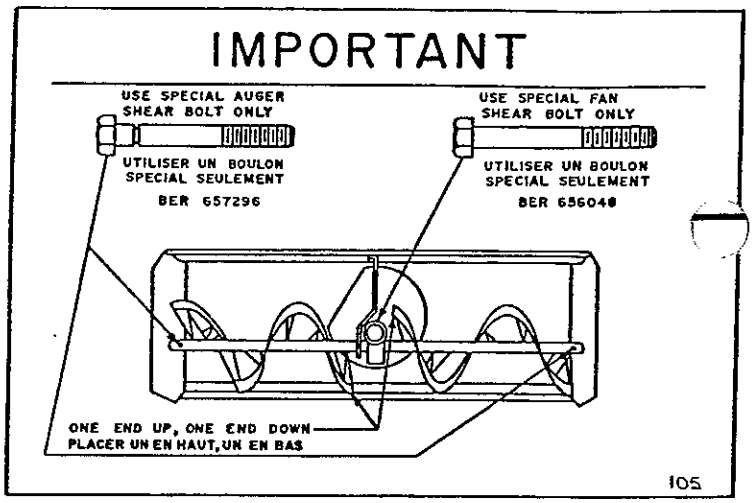

IMPORTANT
Before using:
- **Oil level must be checked.**
- **Fill with "AGMA No 5 EP " extreme pressure oil**
- **Read instructions manual.**

IMPORTANT
Avant usage:
- **Vérifier niveau d'huile.**
- **Remplir avec de l'huile pour extrême pression " AGMA No 5 EP"**
- **Lire manuel d'instructions.**

21

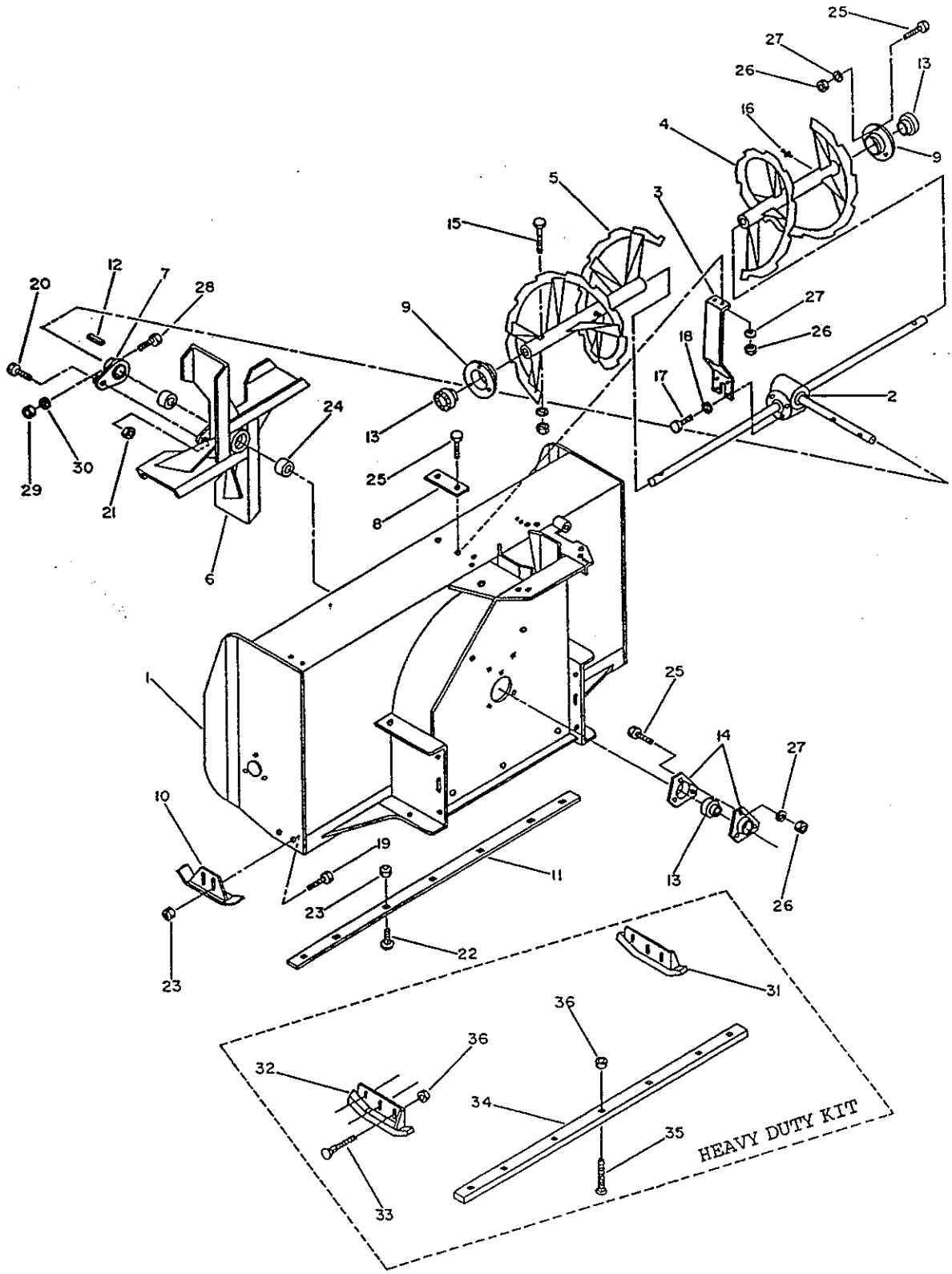
HEAVY DUTY KIT

SE 51 & SE 63 SNOWBLOWER

REF	DESCRIPTION	QTY	PART #
1	Housing - 51" model	1	659147
	- 63" model	1	659530
2	Worm gear box - 51" model	1	661885
	- 63" model	1	661887
3	Gear box support	1	659511
4	Auger assembly (RH) - 51" model	1	657315
	- 63" model	1	657317
5	Auger assembly (LH) - 51" model	1	657314
	- 63" model	1	657316
6	Fan	1	659149
7	Shear plate	1	659492
8	Reinforcement bracket	1	654468
9	Bearing flange	2	655282
10	Adjustable skid shoe	2	659493
11	Cutting edge - 51" model	1	659384
	- 63" model	1	659531
12	Key (1/4" x 1/4" 1 1/4")	1	654643
13	Bearing with locking collar	3	654170
14	Bearing flange	2	657893
15	Bolt (special lockwasher & nut)	2	657296
16	Grease fitting	2	654106
17	Bolt (1/2" NC. x 1", hex.)	4	O/L
18	Washer (1/2", lock)	4	O/L
19	Bolt (3/8" NC. x 1", carriage)	4	O/L
20	Bolt (1/4" NC. x 1 1/4", hex.)	1	O/L
21	Nut (1/4" NC., nylon lock)	1	O/L
22	Bolt (3/8" NC. x 1 1/4", plow)	6	O/L
23	Nut (3/8" NC., nylon lock)	10	O/L
24	Bushing (oil-lite)	2	654689
25	Bolt (3/8" NC. x 1", hex.)	11	O/L
26	Nut (3/8" NC., hex.)	11	O/L
27	Washer (3/8", lock)	11	O/L
28	Bolt (5/16" NC. x 2 1/2", hex.)	1	O/L
29	Nut (5/16" NC., hex.)	1	O/L
30	Washer (5/16", lock)	1	O/L
BOX	Optional Heavy Duty Package - 51" model	1	9350
	- 63" model	1	9351
31	Heavy duty skid shoe RH	1	658828
32	Heavy duty skid shoe LH	1	658829
33	Bolt (3/8" NC x 1", carriage)	6	O/L
34	Heavy duty cutting edge - 51" model	1	659325
	- 63" model	1	659352
35	Bolt (3/8" NC x 1 1/4", plow) - 51" model	8	O/L
	- 63" model	10	O/L
36	Nut (3/8" NC, nylon lock) - 51" model	14	O/L
	- 63" model	16	O/L

*** O/L = Obtain Locally**

WORM GEAR BOX

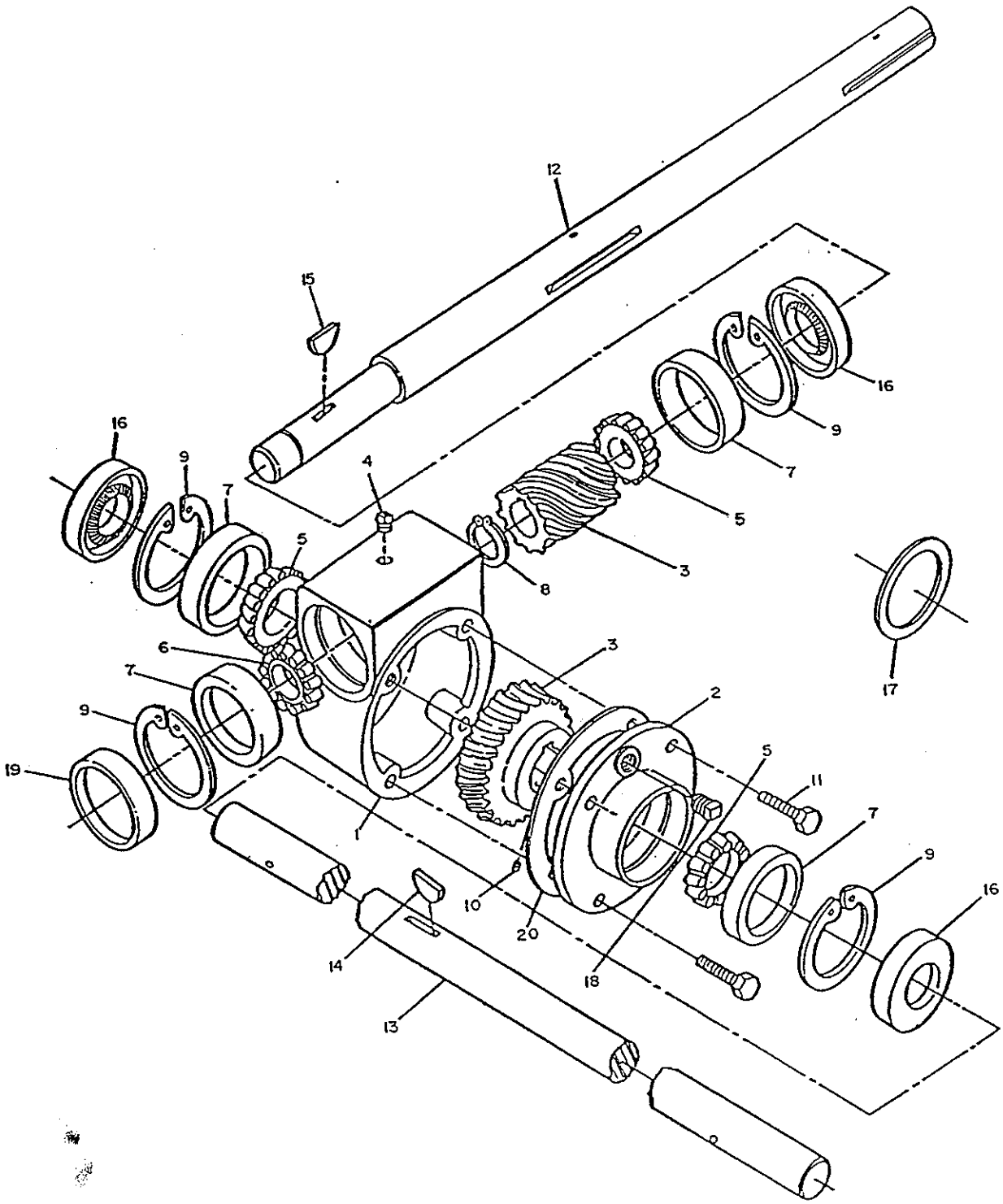

WORM GEAR BOX

REF	DESCRIPTION	QTY	PART #
1	Housing	1	655934
2	Cover	1	655935
3	Worm & bronze gear set	1	655662
4	Plug (3/8", 18 NPT, vent)	1	654927
5	Bearing cone (15126)	3	654496
6	Bearing cone (15101)	1	654497
7	Bearing cup (15245)	4	654498
8	External retaining ring	1	654499
9	Internal retaining ring	4	654500
10	Set screw (1/4" NF x 3/8")	1	654501
11	Cap screw (3/8" NC x 3/4")	4	654502
12	Input shaft	1	661884
13	Output shaft ---	1	------
	51" model	-	654504
	63" model	-	654505
14	Key (18-809, hard, woodruff)	1	654506
15	Key (A-807, hard, woodruff)	1	654507
16	Seal	3	654508
17	Shim (use as required)	-	654513
18	Plug (3/8", 18 NPT, level)	1	654068
19	Input cap	1	654512
20	Gasket	1	654510

*** O/L = Obtain Locally**

#9384 3 POINT HITCH KIT

REF	DESCRIPTION	QTY	PART #
1	Upper hitch	1	659703
2	Lower hitch	2	659704
3	Hitch arm RH	1	659705
4	Hitch arm LH	1	660186
5	Driveline guard	1	655028
6	Driveline (1140 series)	1	657917
7	Hitch pin (cat. 1)	2	654196
8	Key (1/4" x 1/4" x 1 1/4")	1	654643
9	Bolt (5/8"NC x 3 3/4", hex.)	1	O/L
10	Nut (5/8" NC, hex.)	4	O/L
11	Washer (5/8", lock)	4	O/L
12	Bolt (5/8" NC x 3", hex.)	2	O/L
13	Bolt (5/8" NC x 1 1/2", hex.)	1	O/L
14	Bolt (1/2" NC x 3", hex.)	2	O/L
15	Nut (1/2" NC, hex.)	2	O/L
16	Washer (1/2", lock)	2	O/L
17	Bolt (5/16" NC x 2 3/4", hex.)	1	O/L
18	Nut (5/16" NC, nylon lock)	1	O/L
19	Bolt (5/16" NC x 3/4", carriage)	2	O/L
20	Nut (5/16" NC, hex.)	2	O/L
21	Washer (5/16", lock)	2	O/L
22	Set screw (3/8" NC x 3/8", allen)	1	O/L
23	Chain (R-1024 x 12", with S-hooks)	1	O/L

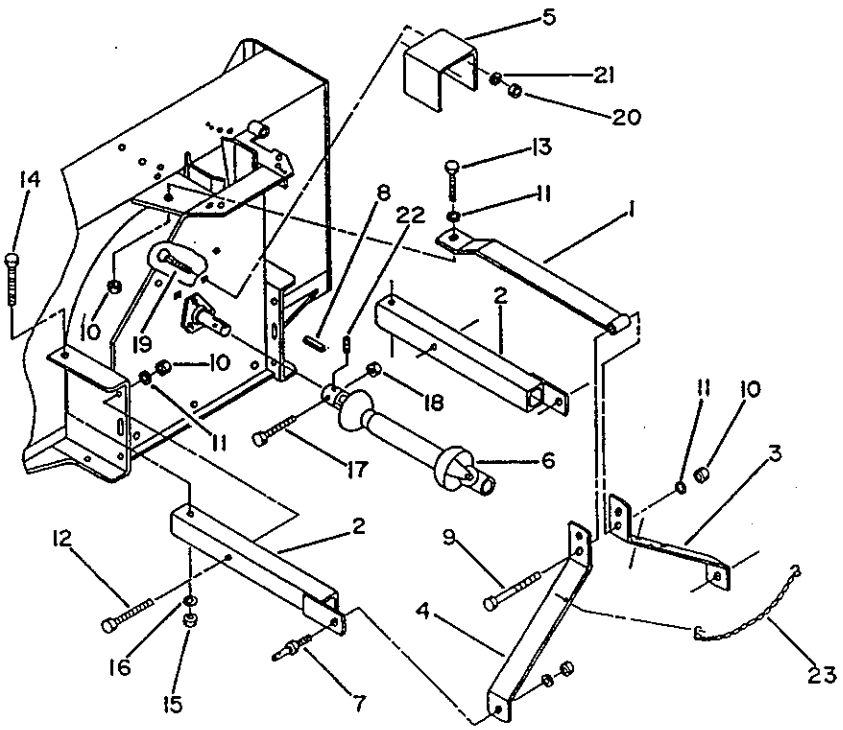

CHUTE WITH DEFLECTOR

REF	DESCRIPTION	QTY	PART #
1	Chute assembly	1	660014
2	Knob	2	657309
3	Nylon washer 11/32".....	2	658467
4	Nylon washer 7/16".....	2	658468
5	Bolt 5/16 x 1/2"- carriage	2	O/L
6	Nut 5/16"NC, nylon lock	2	O/L
7	Hand guard	1	657308
8	Bolt 1/4"NC x - 3/4", hex.	2	O/L
9	Washer 5/16", flat.....	2	O/L
10	Washer 1/4", lock	2	O/L
11	Nut 1/4"NC, hex.	2	O/L
12	Retaining plate	4	659146
13	Bolt 1/4"NC x - 3/4", hex.	8	O/L
14	Washer 1/4", lock	8	O/L
15	Nut 1/4"NC, hex.	8	O/L
16	Nylon ring	1	659151

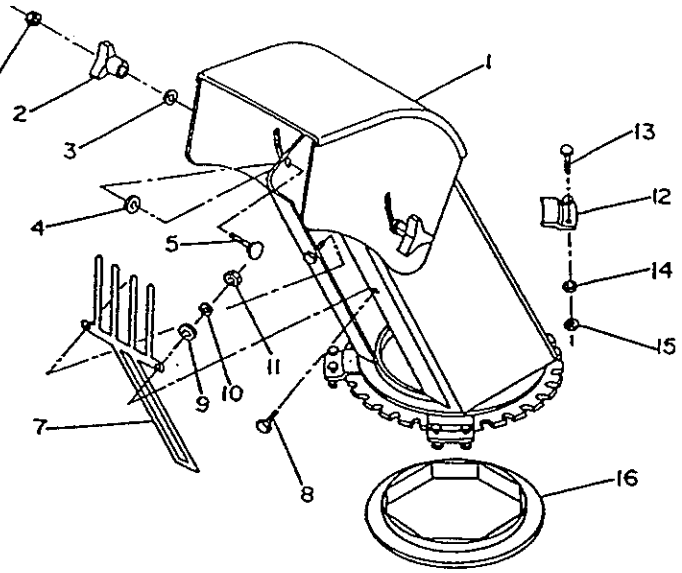

#9377 MANUAL CHUTE ROTATION

REF	DESCRIPTION	QTY	PART #
1	Handle	1	658252
2	Rotation tube	1	660188
3	Rotation yoke	1	659595
4	Universal block	1	658193
5	Rotation worm CCW	1	659161
6	Worm support bracket ...	1	659145
7	Pin 1/4" x 1 1/4",roll .	2	O/L
8	Pin 5mm x 100mm, hair...	1	659073
9	Plastic handle	1	656797
10	Bushing (1 5/16" lg.)...	1	657335
11	Bushing (1 11/16" lg.)..	1	657336
12	Capscrew 10-24 NC x 1"..	1	O/L
13	Nut 10-24, nylon lock ..	1	O/L
14	Handle support bracket..	1	660187
15	Anchor tube	1	660269
16	Bolt 3/8" x 1 1/4",hex..	2	O/L
17	Nut 3/8" NC, hex.	2	O/L
18	Washer 3/8", lock	2	O/L
19	Set screw 3/8" x 5/16"..	1	O/L
20	Plastic grommet	1	657390
21	Support angle	1	660388
22	Bolt 3/4" x 1 1/2, hex..	1	O/L
23	Washer 3/4", lock	1	O/L
24	Nut 3/4"NC, hex.	1	O/L

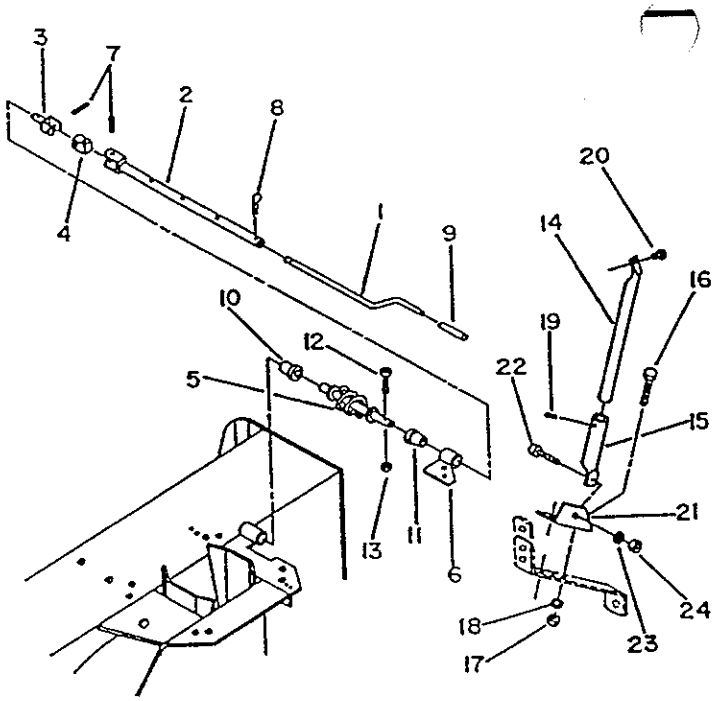

* O/L = Obtain Locally

9476 ELECTRIC ROTATION

REF	DESCRIPTION	QTY	# PARTS
1	Rotation support	1	662476
2	Adaptor	1	662459
3	Rotation worm	1	660336
4	Electric motor	1	662455
5	Double wire ass'y 102"	1	662468
6	Fuse 15 amp.	1	660687
7	Wire ass'y 18"	1	660692
8	Wire 16ga. x 18"	1	660323
9	Bushing 1 5/16"	1	657335
10	Bushing 1 11/16"	1	657336
11	Rubber cap	1	658666
12	Control switch	1	658778
13	Connector tap	1	656665
14	Fuse holder	1	658665
15	Hex. bolt 1/4" x 3/4"	3	O/L
16	Socket head capscrew 10-24 x 1"	1	O/L
17	Nylon lock nut 10-24	1	O/L
18	Lock washer 1/4"	3	O/L
19	Flatwasher 1/4"dia.	3	O/L
20	Connector(male)	2	655217
21	Connector(female)	2	657853

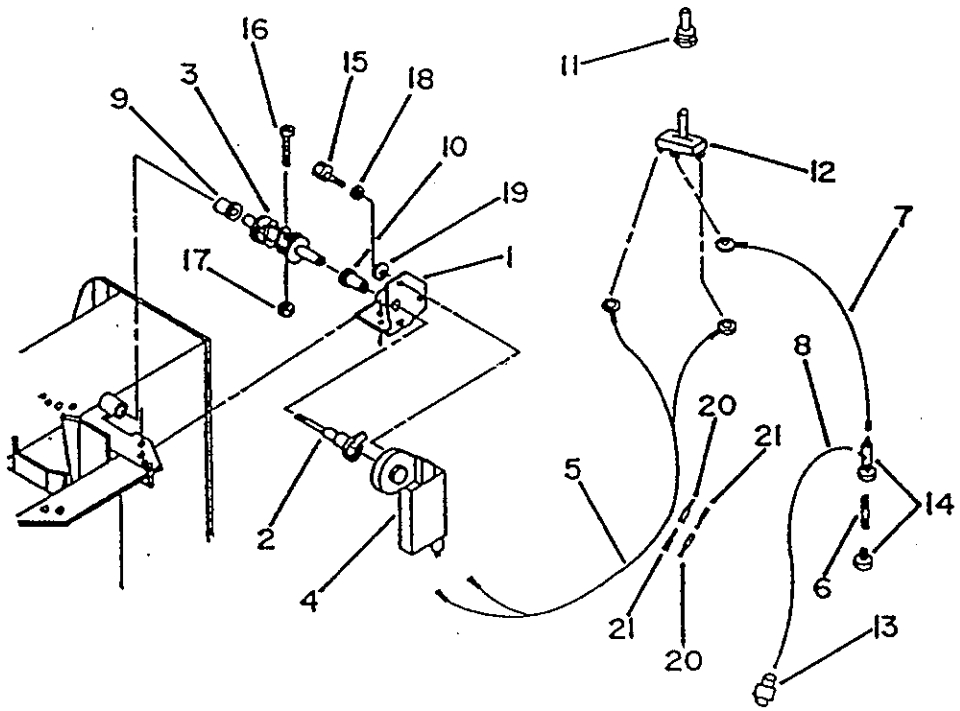

#9379 HYDRAULIC CHUTE ROTATION

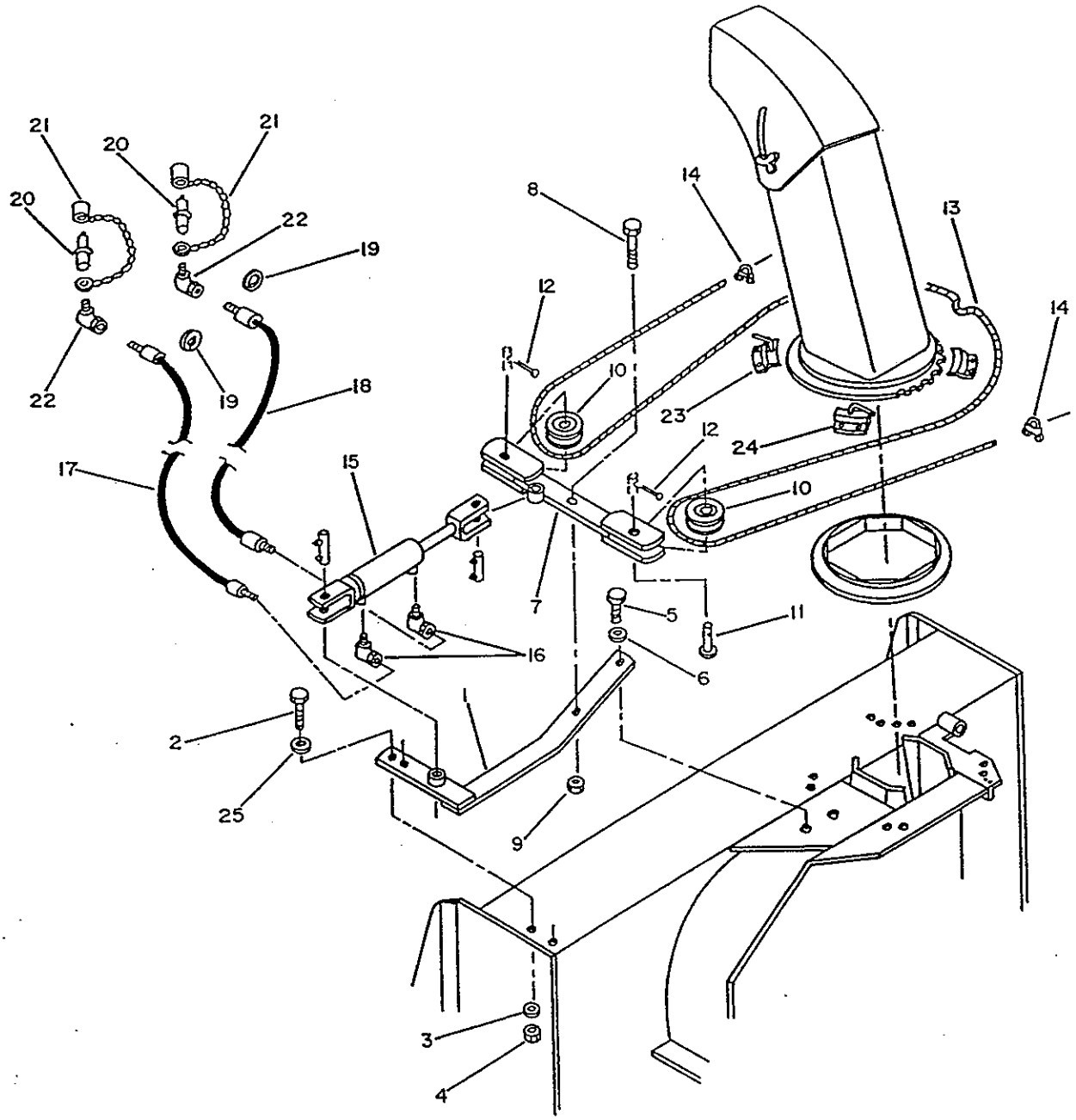

#9379 HYDRAULIC CHUTE ROTATION

REF	DESCRIPTION	QTY	PART #
1	Support arm	1	659796
2	Bolt (3/8"NC x 1", hex)	2	O/L
3	Washer (3/8", lock)	2	O/L
4	Nut (3/8"NC, hex)	2	O/L
5	Bolt (5/8"NC x 1", hex)	1	O/L
6	Washer (5/8", lock)	1	O/L
7	Rotation arm	1	659870
8	Bolt (5/8"NC x 2 1/4", hex)	1	O/L
9	Nut (5/8"NC, hex)	1	O/L
10	Pulley	2	656037
11	Pin 5/8" x 1 1/8" lg.	2	659871
12	Pin (1/8"dia. x 1", cotter)	2	O/L
13	Cable (3/16"dia. x 94")	1	660078
14	Cable clamp	2	654202
15	Cylinder and pins assembly	1	656557
16	Elbow 90 degrees	2	654438
17	Hose 1/4" x 46"	1	659239
18	Hose 1/4" x 51"	1	659240
19	Green plastic ring (identification)	2	658209
	Yellow plastic ring (identification)	2	658206
20	Male quick coupler	2	657153
21	Dust cap	2	658395
22	Elbow 90 degrees	2	654438
23	Retaining plate with cable guide (front)	1	660076
24	Retaining plate with cable guide (rear)	1	660077
25	Washer (3/8"dia. hole, flat)	2	O/L

HYDRAULIC ROTATION CYLINDER

REF	DESCRIPTION	QTY	PART #
1	Pin (1/8"dia. x 1 1/4", cotter)	4	656682
2	Pin 3/4"dia. x 2 1/2"lg.	2	656683
3	Rod	1	656684
4	Rod wiper	1	656685
5	Snap ring	1	656686
6	Cap	1	656687
7	Backup ring	2	656688
8	O-ring	1	656689
9	Backup ring	2	656690
10	O-ring	1	656691
11	O-ring	1	656692
12	Piston	1	656693
13	Nut	1	656694
14	Cylinder tube	1	656695
15	O-ring for cap	1	656932
	Seal kit	1	657270

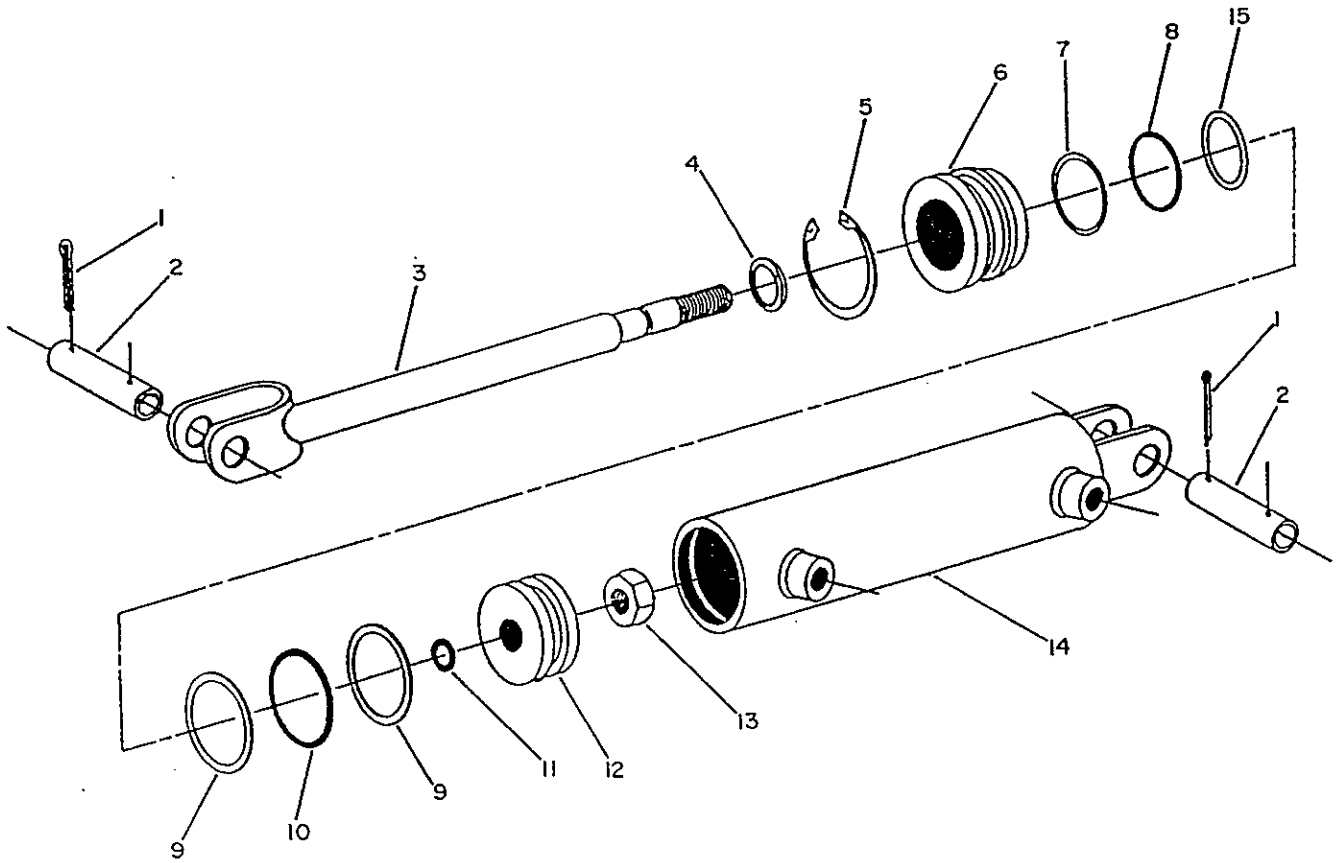

#9380 HYDRAULIC CHUTE ROTATION

REF	DESCRIPTION	QTY	PART #
1	Rotation bracket	1	660282
2	Rotation worm	1	660283
3	Hose 1/4" x 28"	2	660324
4	Hydraulic motor	1	660287
5	Locking collar	1	660284
6	Flow restrictor	2	657756
7	Key	1	660285
8	Connector	2	660286
9	Plastic bushing	1	657335
10	Plastic bushing	1	657336
11	Yellow plastic ring	1	658206
12	Green plastic ring	1	658209
13	Elbow 90 degree	2	655211
14	Male quick coupler	2	657094
15	Dust cap	2	658203
16	Set screw 1/4"x 5/16"	2	O/L
17	Bolt 3/8" x 1 1/4",hex	2	O/L
18	Washer 7/16", flat	2	O/L
19	Washer 3/8", lock	2	O/L
20	Nut 3/8"NC, hex.	2	O/L

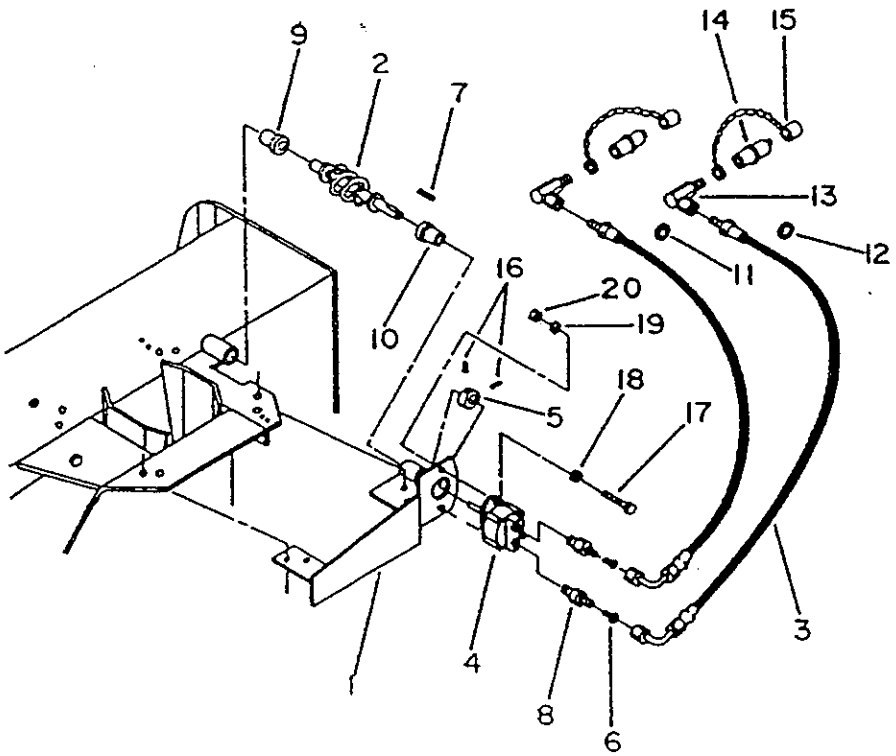

#9369 ELECTRIC DEFLECTOR

REF	DESCRIPTION	QTY	PART #
1	Double wire ass'y 102"	1	660695
2	Fuse 6 amp.	1	657285
3	Wire ass'y 17"	1	655442
4	Wire ass'y 18"	1	660692
5	Wire ass'y 5"	2	655441
6	Wire 16 GA x 10"	1	O/L
7	Rubber cap	1	658666
8	Connector tap	1	660121
9	Connector	2	656664
10	Fuse holder	1	658665
11	Switch	1	658778
12	Actuator	1	656848
13	Deflector bracket	1	660008
14	Chute bracket	1	660137
15	Allen capscrew (5/16" x 3/4")	8	O/L
16	Nut 5/16"NC, hex.	8	O/L
17	Washer 5/16", lock	8	O/L
18	Bolt 1/4"NC x 1 1/2"	2	O/L
19	Nut 1/4"NC, nylon lock	2	O/L
20	Connector (male)	2	655217
21	Connector (female)	2	657853

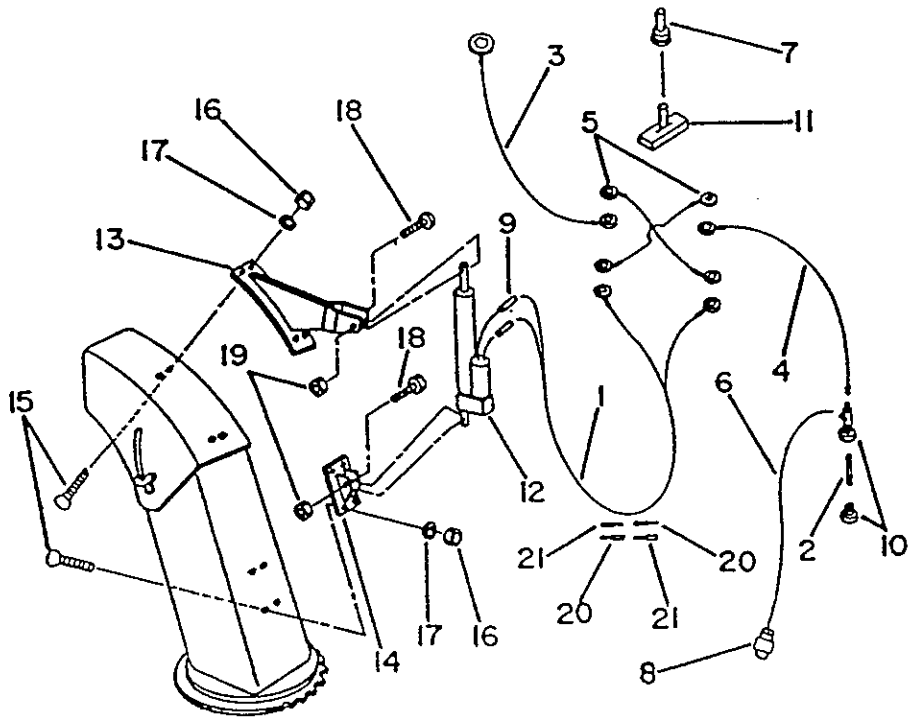

#9376 HYDRAULIC CHUTE DEFLECTOR

REF	DESCRIPTION	QTY	PART #
1	Allen flat socket cap screw (5/16"N.C. x 3/4")	8	O/L
2	Lockwasher (dia. 5/16")	8	O/L
3	Nut (5/16"N.C., hex.)	8	O/L
4	Carriage bolt (5/16"N.C. x 3/4")	2	O/L
5	Elbow, 90 degree (3/8"N.P.T.-S.T.W. x 1/4"N.P.T.-S.W.S)	2	654438
6	Hose (1/4" x 54"lg., 1/4"N.P.T.-S.T.M. x 1/4"N.P.T.-S.T.M.)	1	656929
7	Hose (1/4" x 48"lg., 1/4"N.P.T.-S.T.M. x 1/4"N.P.T.-S.T.M.)	1	657796
8	Pin (included with cylinder)	2	O/L
9	Pin (included with cylinder)	4	O/L
10	Deflector fixation	1	660142
11	Base fixation	1	660143

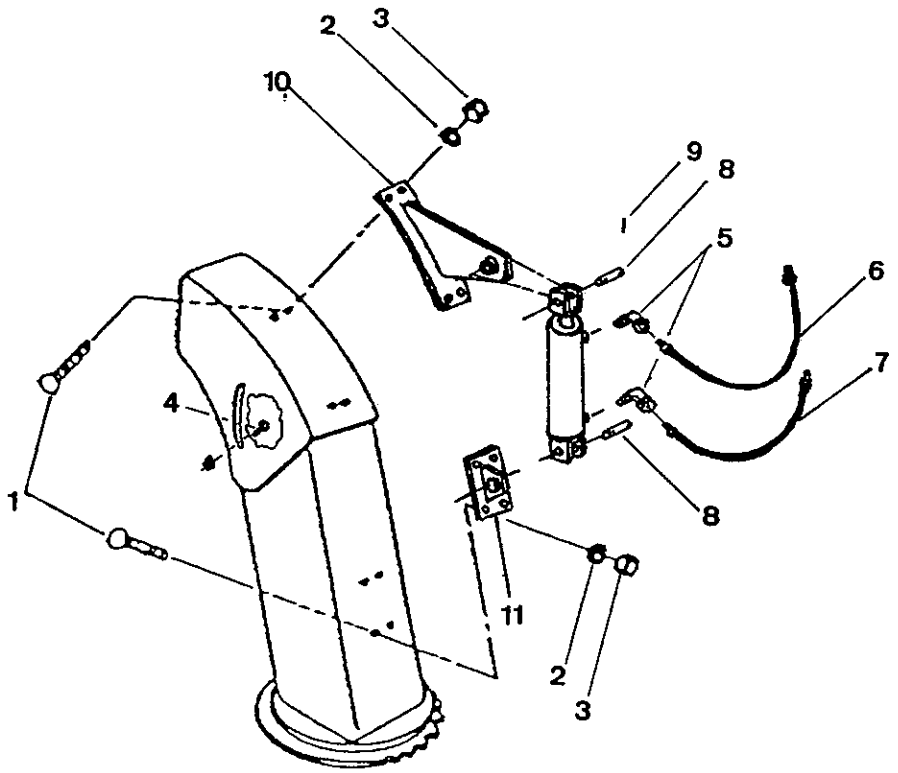

#9350-51 HEAVY DUTY PACKAGE

REF	DESCRIPTION	QTY	PART #
1	Heavy duty skid shoe RH	1	658828
2	Heavy duty skid shoe LH	1	658829
3	Bolt (3/8" NC x 1", carriage)	6	O/L
4	Heavy duty cutting edge - 51" model	1	659325
	- 63" model	1	659352
5	Bolt (3/8" NC x 1 1/4", plow) - 51" model	8	O/L
	- 63" model	10	O/L
6	Nut (3/8" NC, nylon lock) - 51" model	14	O/L
	- 63" model	16	O/L

#9350-51 HEAVY DUTY PACKAGE

REF	DESCRIPTION	QTY	PART #
1	Extra heavy duty skid shoe RH	1	659343
2	Extra heavy duty skid shoe LH	1	659344
3	Bolt (3/8" NC x 1", carriage)	6	O/L
4	Heavy duty cutting edge - 51" model	1	659325
	- 63" model	1	659352
5	Bolt (3/8" NC x 1 1/4", plow) - 51" model	8	O/L
	- 63" model	10	O/L
6	Nut (3/8" NC, nylon lock) - 51" model	14	O/L
	- 63" model	16	O/L

*** O/L = Obtain Locally**

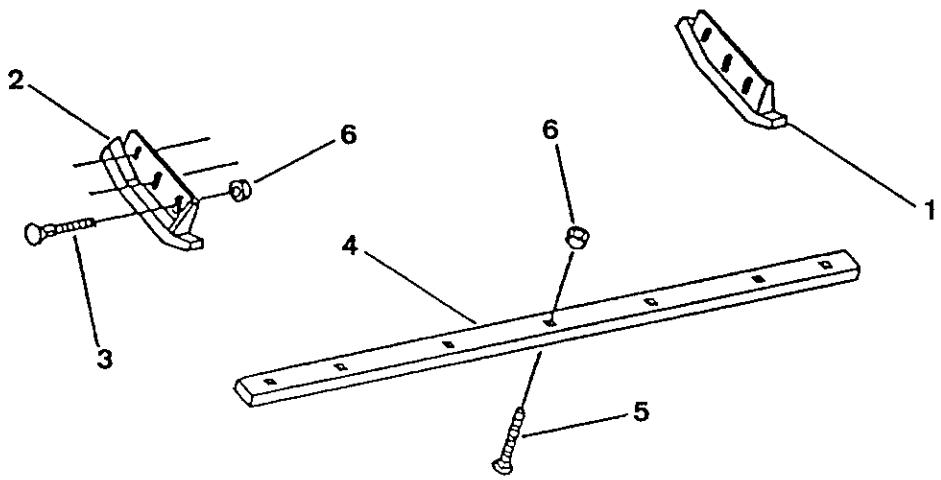

DRIVELINE ASSEMBLY

REF	DESCRIPTION	QTY	PART #
1	Yoke (1 3/8"-6 spline)	1	658092
2	Quick disconnect col. kit - in item 1	1	659093
3	Cross bearing kit	2	658094
4	Inboard yoke Ov.	1	658095
5	Inner profile Ov.	1	658096
6	Spring pin 10 x 75	2	658097
7	Outer profil 1	1	658098
8	Inboard yoke 1	1	658099
9	Yoke	1	658100
10	Shield cone 4 rib	2	658101
11	Outer shield tube	1	658102
12	Inner shield tube	1	658103
13	Bearing ring SC 15	2	658104 "665848"
14	Screw in item 10	2	658105
15	Safety chain	1	658106
	Decal "OUT" in item 11	1	656781

pour PTO BENZE

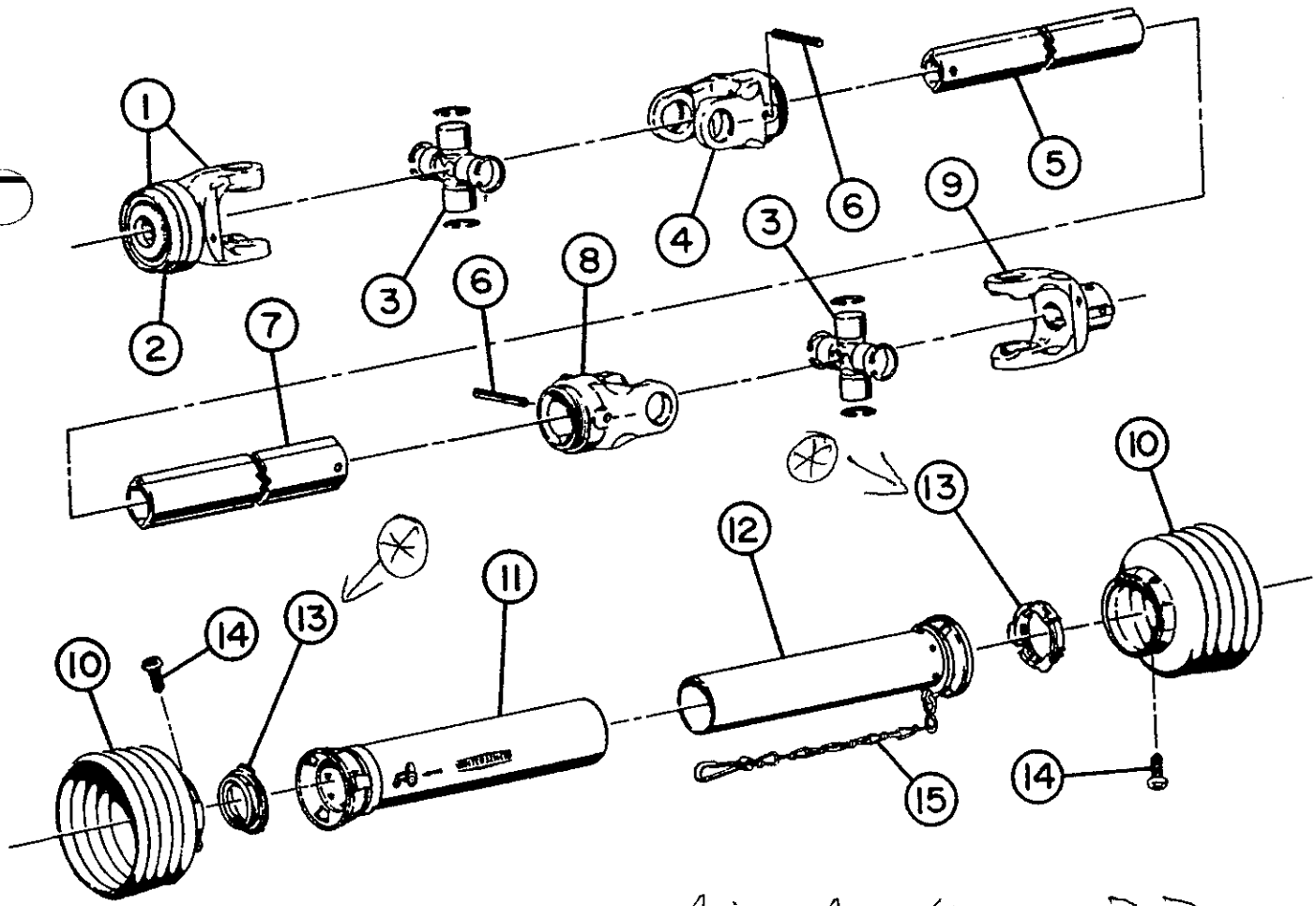

est-ce bien le # 13 ??

SAFETY DECALS

REPLACE IMMEDIATELY IF DAMAGED

(1) #656779

(3) #656780

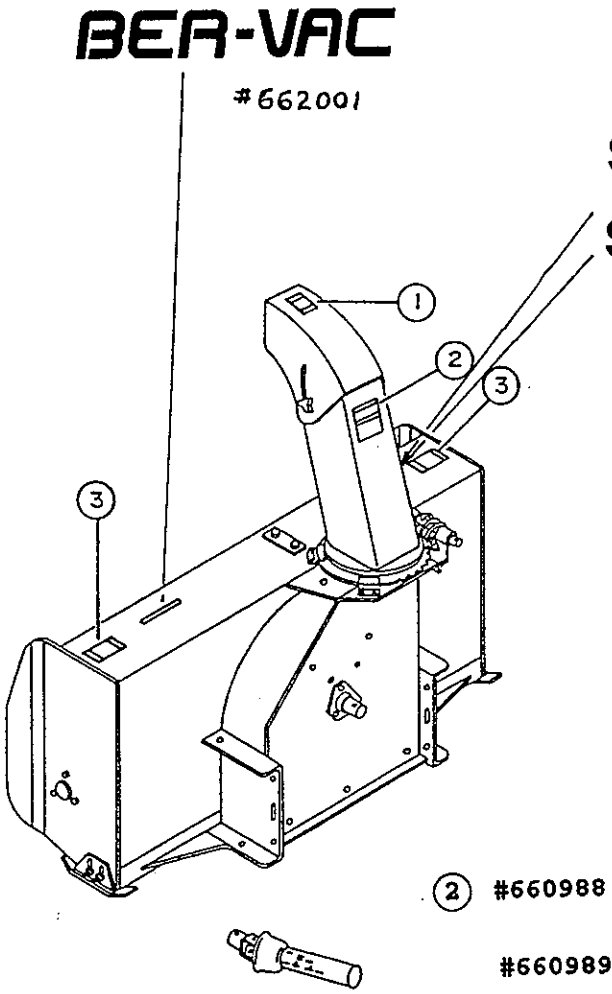

(2) #660988

#660989

WARNING

FAILURE TO FOLLOW SAFE OPERATING PROCEDURES MAY RESULT IN INJURY.

- FOR SAFE OPERATION FOLLOW ALL OPERATING INSTRUCTIONS ANS SAFETY PRECAUTIONS OPERATOR'S MANUAL.
- EYE PROTECTION MUST BE WORN AT ALL TIMES.
- KEEP HANDS, FEET AND CLOTHING AWAY FROM POWER DRIVEN PARTS.
- STOP ENGINE BEFORE LEAVING OPERATOR POSITION.
- WAIT FOR ALL MOVEMENTS TO STOP BEFORE STARTING TO ADJUST, LUBRICATE, CLEAN OR UNCLUG THE MACHINE.
- KEEP THE AREA OF OPERATION CLEAR OF ALL PERSONS AND ANIMALS.
- KEEP ALL GUARDS AND SHIELDS IN PLACE.
- NEVER DIRECT DISCHARGE TOWARD BYSTANDERS, BUILDINGS, CARS ETC.
- ALWAYS USE A DUST MASK WHEN WORKING IN DUSTY CONDITIONS.
- KEEP PLASTIC MATERIALS AWAY FROM INTENSE HEAT AND OPEN FLAME.
- NEVER ALLOW PASSENGERS ON THE ATTACHMENT.

279

MISE EN GARDE

NÉGLIGER DE SUIVRE LES PROCÉDURES SÉCURITAIRES D'UTILISATION PEUT ENTRAÎNER DES BLESSURES.

- POUR UNE UTILISATION SÉCURITAIRE SUIVRE TOUTES LES INSTRUCTIONS D'UTILISATION ET PRÉCAUTIONS SÉCURITAIRES DANS LE MANUEL DE L'OPÉRATEUR.
- PORTER DES LUNETTES DE SÉCURITÉ EN TOUT TEMPS.
- GARDER MAINS, PIEDS ET VÊTEMENTS ÉLOIGNÉS DES PIÈCES MOTRICES.
- ARRÊTER LE MOTEUR AVANT DE QUITTER LA POSITION DE L'OPÉRATEUR.
- ATTENDRE QUE TOUS LES MOUVEMENTS SOIENT ARRÊTÉS AVANT D'AJUSTER, LUBRIFIER, NETTOYER OU DÉBLOQUER LA MACHINE.
- GARDER L'ENDROIT D'UTILISATION DÉGAGÉ DE TOUTES PERSONNES ET ANIMAUX.
- GARDER TOUS LES ÉCRANS PROTECTEURS EN PLACE.
- JAMAIS DIRIGER L'ÉVACUATION VERS DES PIÉTONS, BÂTIMENTS, AUTOMOBILES, ETC.
- TOUJOURS UTILISER UN MASQUE À POUSSIÈRE DANS UN ENVIRONNEMENT POUSSIÉREUX.
- GARDER TOUTES LES MATIÈRES PLASTIQ ÉLOIGNÉES DE LA CHALEUR INTENSE ET FLAMMES.
- NE JAMAIS PERMETTRE DE PASSAGERS SUR CETTE MACHINE.

280

TORQUE SPECIFICATION TABLE

GENERAL TORQUE SPECIFICATION TABLE (Revised 2-74)

USE THE FOLLOWING TORQUES WHEN SPECIAL TORQUES ARE NOT GIVEN

NOTE: These values apply to fasteners as received from supplier, dry, or when lubricated with normal engine oil. They do not apply if special graphited or moly disulphide greases or other extreme pressure lubricants are used. This applies to both UNF and UNC threads.

SEE Grade No.		2				5				8 *			
BOLT HEAD IDENTIFICATION MARKS AS PER GRADE NOTE: MANUFACTURING MARKS WILL VARY													
Bolt Size		Torque				Torque				Torque			
		Pounds Feet		Newton-Meters		Pounds Feet		Newton-Meters		Pounds Feet		Newton Meters	
Inches	Millimeters	Min.	Max.	Min.	Max.	Min.	Max.	Min.	Max.	Min.	Max.	Min.	Max.
1/4	6.35	5	6	6.8	8.13	9	11	12.2	14.9	12	15	16.3	30.3
5/16	7.94	10	12	13.6	16.3	17	20.5	23.1	27.8	24	29	32.5	39.3
3/8	9.53	20	23	27.1	31.2	35	42	47.5	57.0	45	54	61.0	73.2
7/16	11.11	30	25	40.7	47.4	54	64	73.2	86.8	70	84	94.9	113.9
1/2	12.70	45	52	61.0	70.5	80	96	108.5	130.2	110	132	149.2	179.0
9/16	14.29	65	75	88.1	101.6	110	132	149.2	179.0	160	192	217.0	260.4
5/8	15.88	95	105	128.7	142.3	150	180	203.4	244.1	220	264	298.3	358.0
3/4	19.05	150	185	203.3	250.7	270	324	366.1	439.3	380	456	515.3	618.3
7/8	22.23	160	200	216.8	271.0	400	480	542.4	650.9	600	720	813.6	976.3
1	25.40	250	300	338.8	406.5	580	696	786.5	943.8	900	1080	1220.4	1464.5
1-1/8	25.58	—		—		800	880	1084.8	1193.3	1280	1440	1735.7	1952.6
1-1/4	31.75	—		—		1120	1240	1518.7	1681.4	1820	2000	2467.9	2712.0
1-3/8	34.93	—		—		1460	1680	1979.8	2278.1	2380	2720	3227.3	3688.3
1-1/2	38.10	—		—		1940	2200	2630.6	2983.2	3160	3560	4285.0	4827.4

* Thick nuts must be used with Grade 8 bolts.

METRIC BOLT TORQUE SPECIFICATIONS

Size of screw	Grade No.	Coarse thread			Fine thread		
		Pitch (mm)	Pounds Feet	Newton-Meters	Pitch (mm)	Pounds Feet	Newton-Meters
M6	4T (4)	1.0	3.6–5.8	4.9–7.9	—	—	—
	7T (7)		5.8–9.4	7.9–12.7		—	—
	8T (8) (11)		7.2–10	9.8–13.6		—	—
M8	4T	1.25	7.2–14	9.8–19	1.0	12–17	16.3–23
	7T		17–22	23–29.8		19–27	25.7–36.6
	8T		20–26	27.1–35.2		22–31	29.8–42
M10	4T	1.5	20–25	27.1–33.9	1.25	20–29	27.1–39.3
	7T		34–40	46.1–54.2		35–47	47.4–63.7
	8T		38–46	51.5–62.3		40–52	54.2–70.5
M12	4T	1.75	28–34	37.9–46.1	1.25	31–41	42–55.6
	7T		51–59	69.1–79.9		56–68	75.9–92.1
	8T		57–66	77.2–89.4		62–75	84–101.6
M14	4T	2.0	49–56	66.4–75.9	1.5	52–64	70.5–86.7
	7T		81–93	109.8–126		90–106	122–143.6
	8T		96–109	130.1–147.7		107–124	145–168
M16	4T	2.0	67–77	90.8–104.3	1.5	69–83	93.5–112.5
	7T		116–130	157.2–176.2		120–138	162.6–187
	8T		129–145	174.8–196.5		140–158	189.7–214.1
M18	4T	2.0	88–100	119.2–136	1.5	100–117	136–158.5
	7T		150–168	203.3–227.6		177–199	239.8–269.6
	8T		175–194	237.1–262.9		202–231	273.7–313
M20	4T	2.5	108–130	146.3–176.2	1.5	132–150	178.9–203.3
	7T		186–205	252–277.8		206–242	279.1–327.9
	8T		213–249	288.6–337.4		246–289	333.3–391.6

RAD *TECHNOLOGIES INC.*

2835, Chemin de L'Aéroport, Thetford Mines (Québec) G6G 5R7
Tél.: (418) 338-4499 Télécopieur: (418) 338-6090